CATALOG OF WRM MACHINES

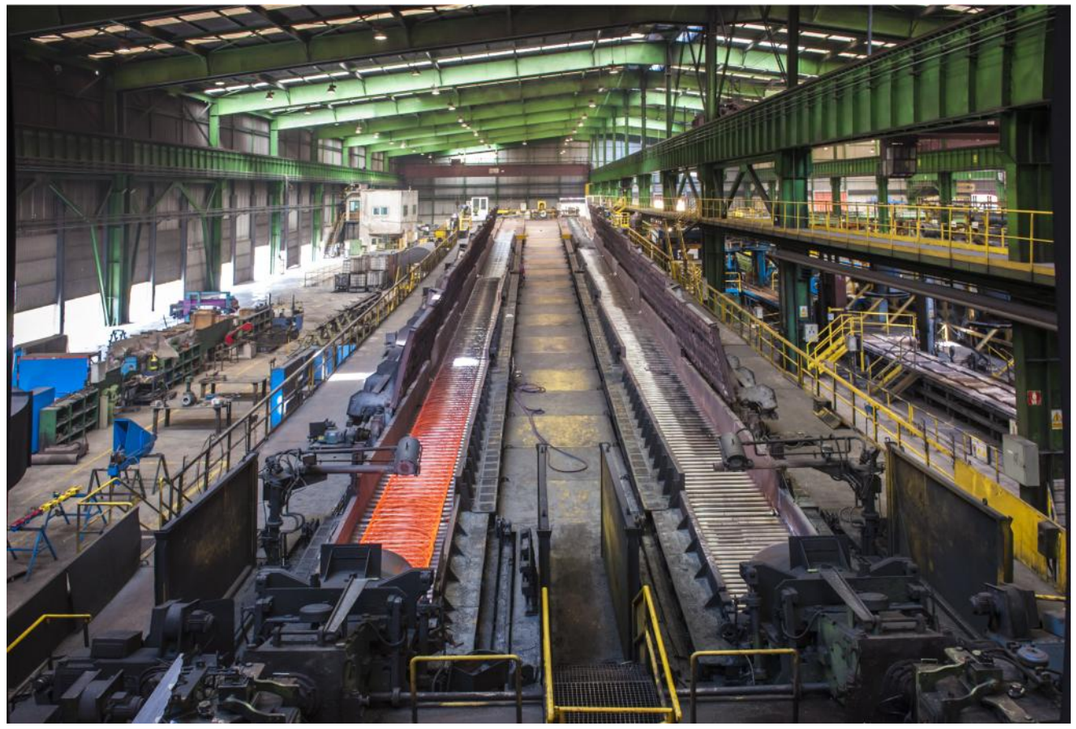

Fecha:
09/10/2017

ROUGH STANDS GROUP LAGUN-ARTEA

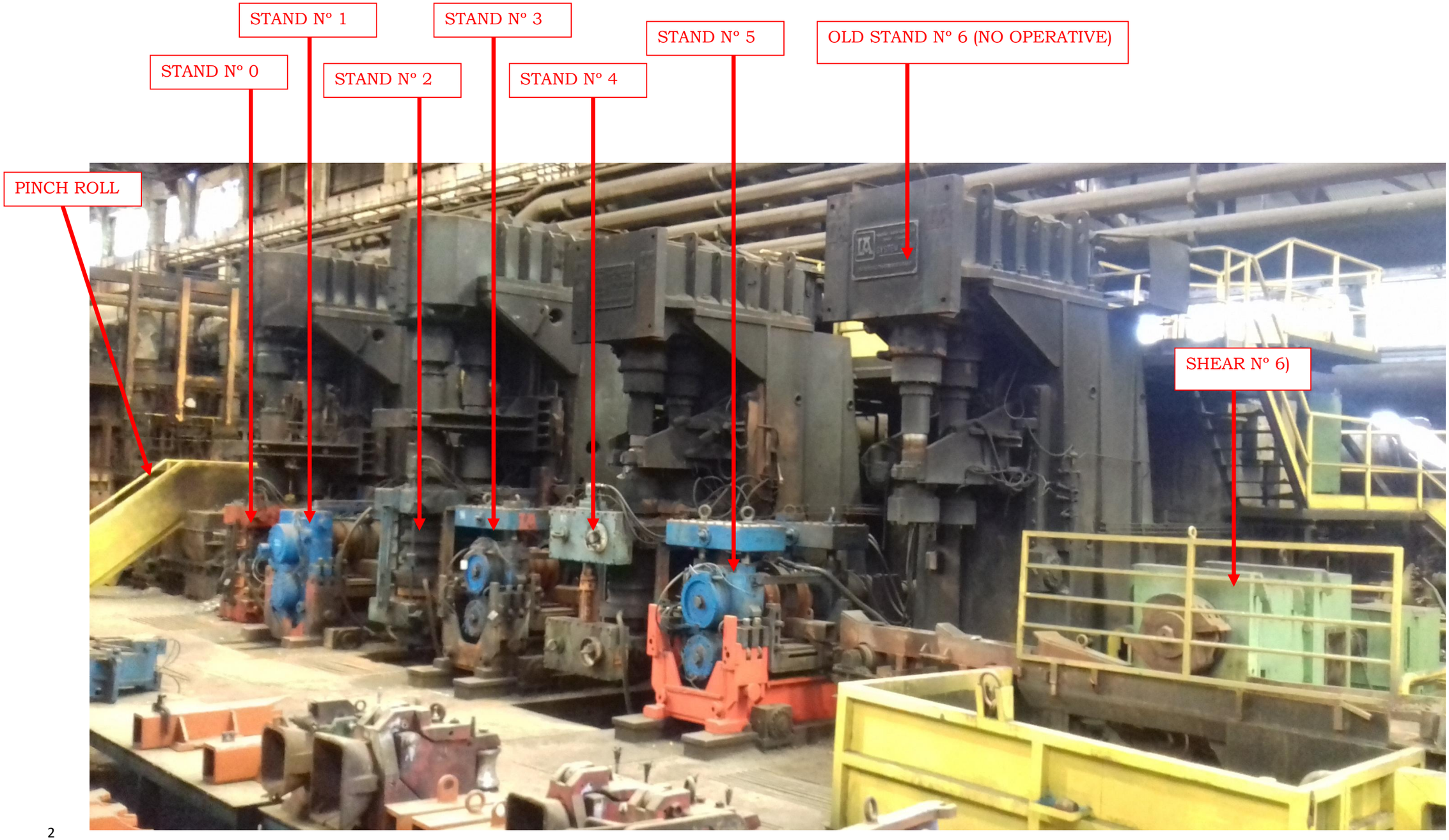

PINCH ROLL ROUGH

LAGUN-ARTEA machinery

Years of manufacturing 1993

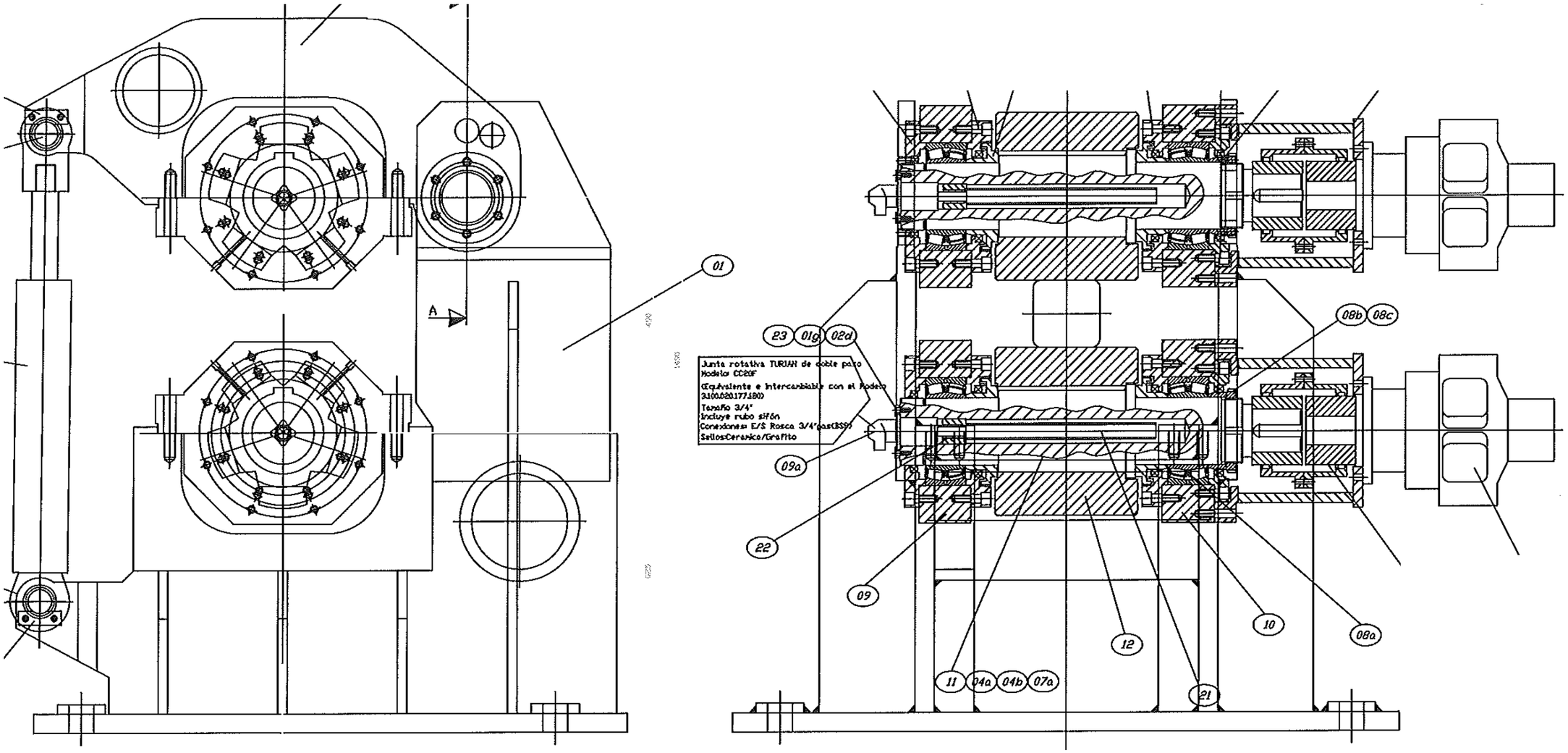

ROUGH STANDS Nº 0

LAGUN-ARTEA machinery

Years of manufacturing 1993

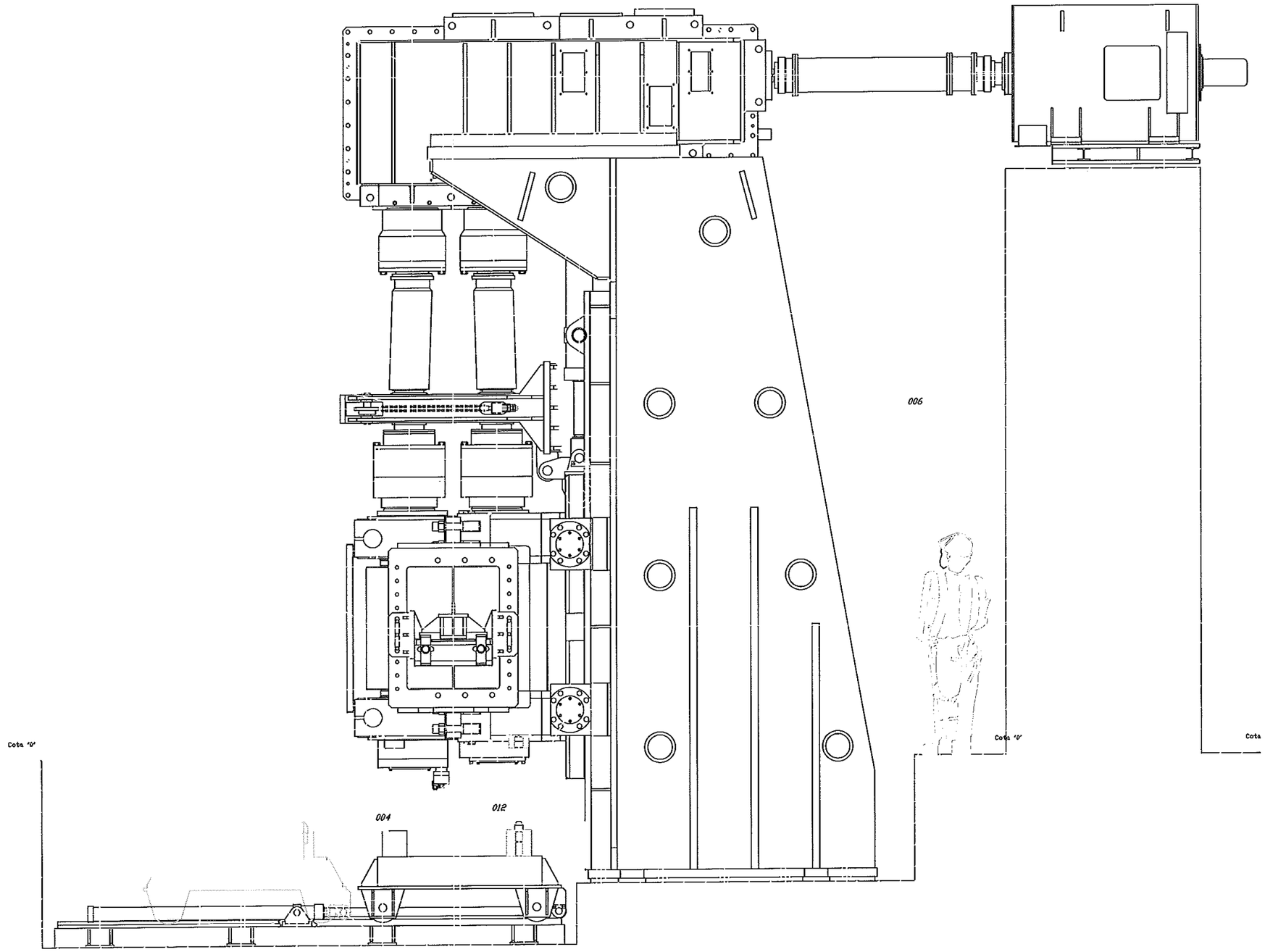

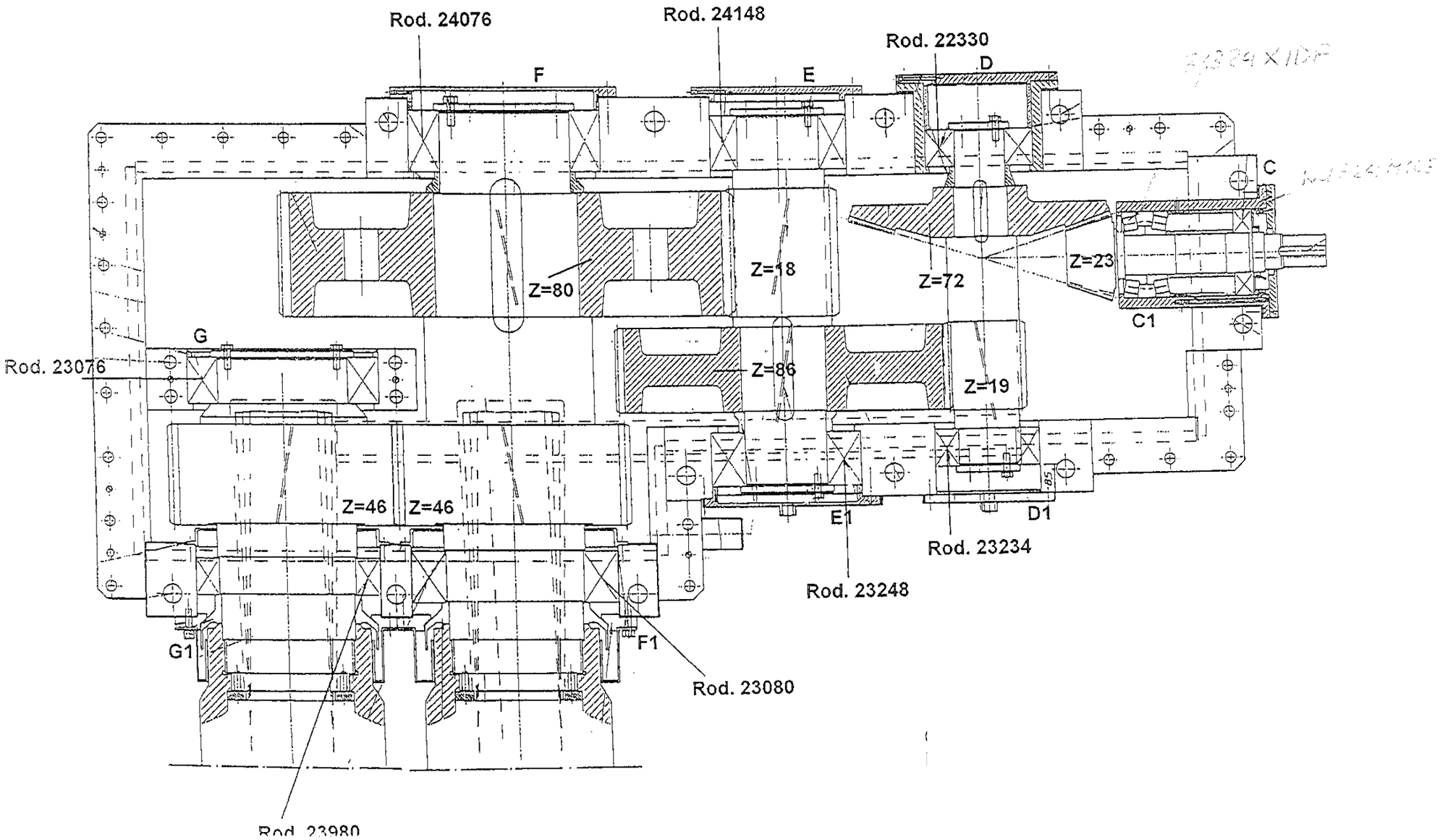
Rod. 24076
Rod. 24148
Rod. 22330
F
E
D
C
Z=80
Z=18
Z=72
Z=23
C1
G
Rod. 23076
Z=86
Z=19
Z=46
Z=46
E1
D1
Rod. 23234
Rod. 23248
G1
F1
Rod. 23080
Rod. 23980

ROUGH STANDS Nº 1

LAGUN-ARTEA machinery

Years of manufacturing 1993

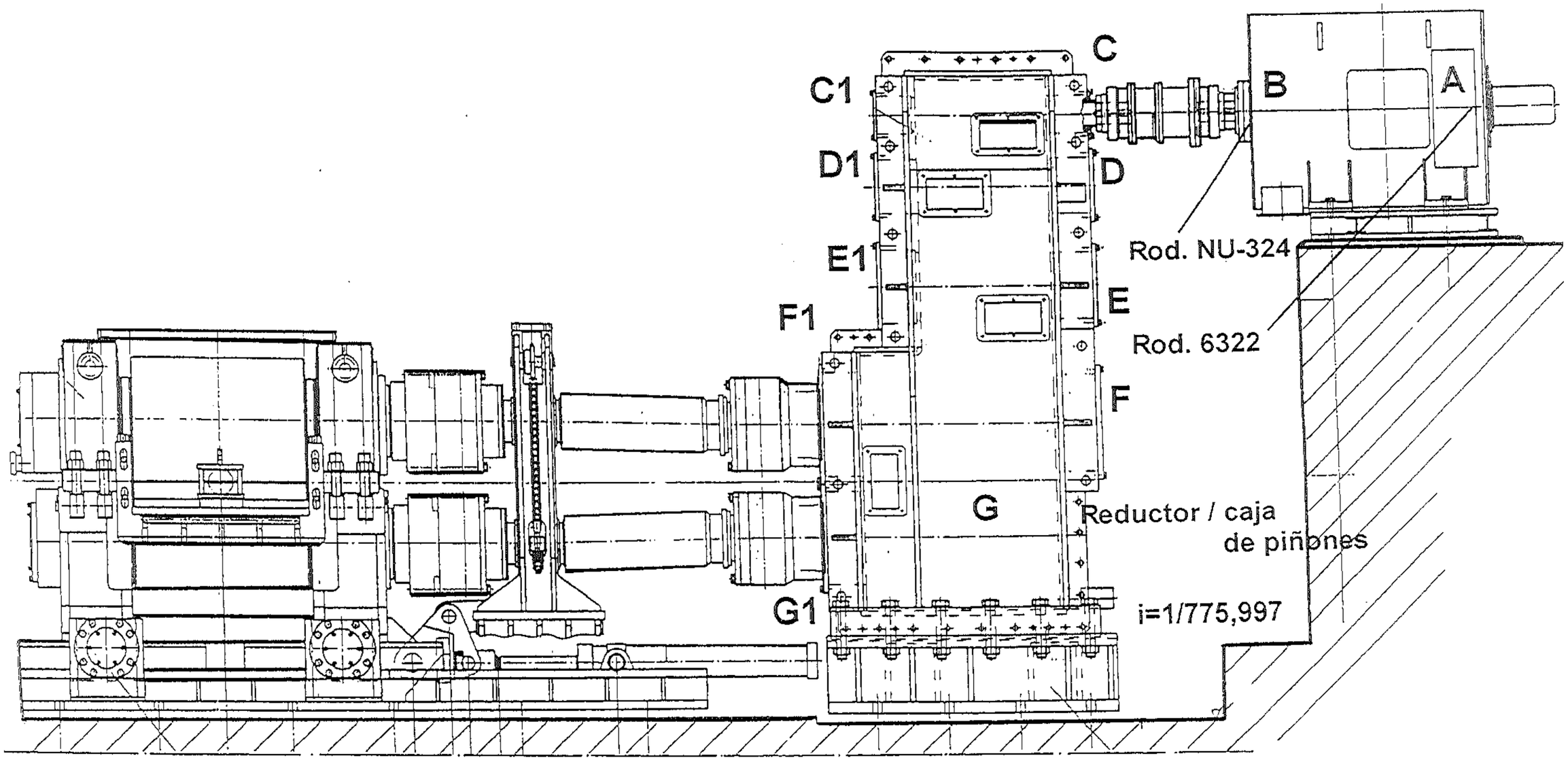

REDUCER STANDS N° 1

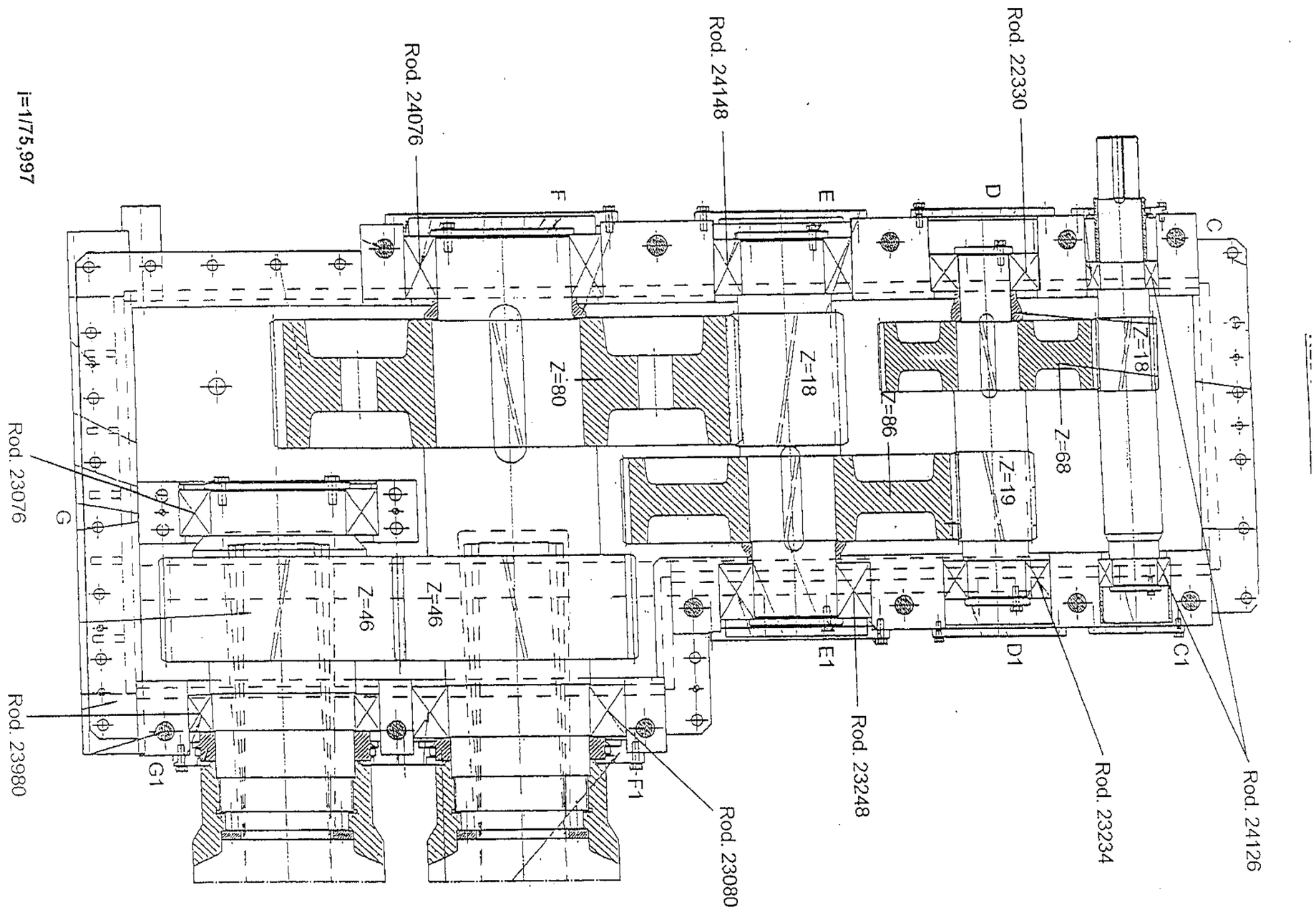

ROUGH STANDS Nº 2

LAGUN-ARTEA machinery

Years of manufacturing 1993

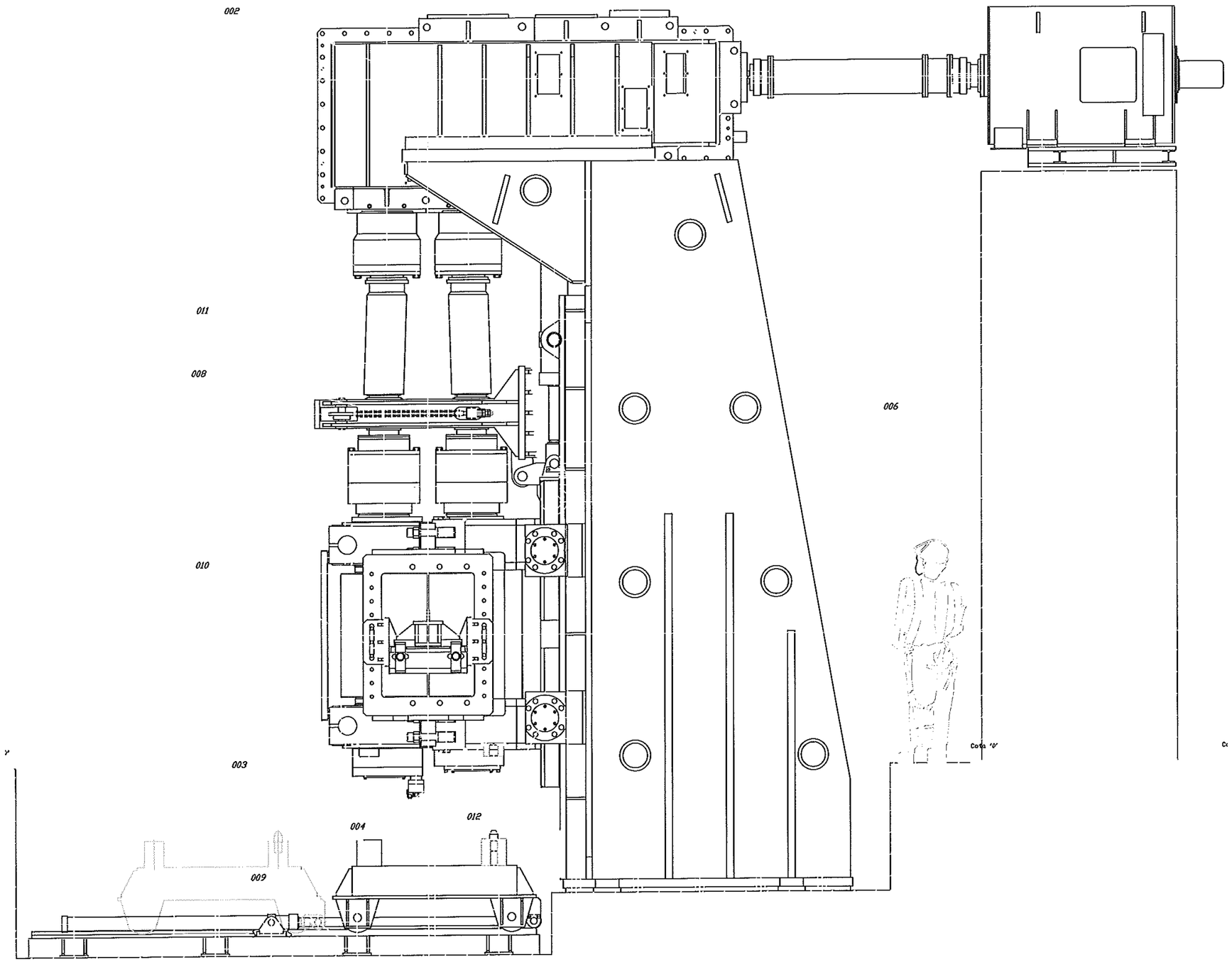

REDUCER STANDS Nº 2

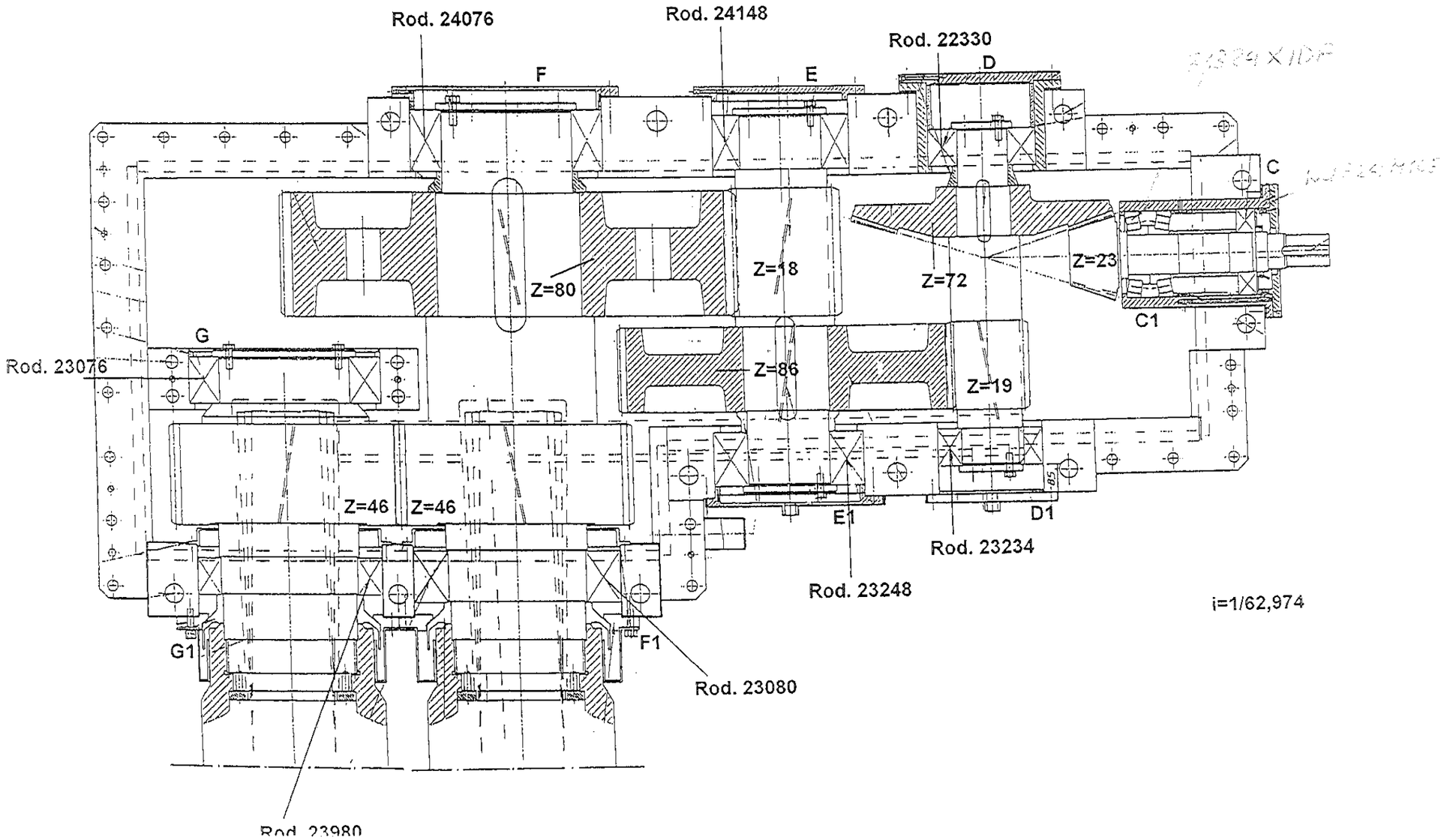

ROUGH STANDS N° 3

LAGUN-ARTEA machinery

Years of manufacturing 1993

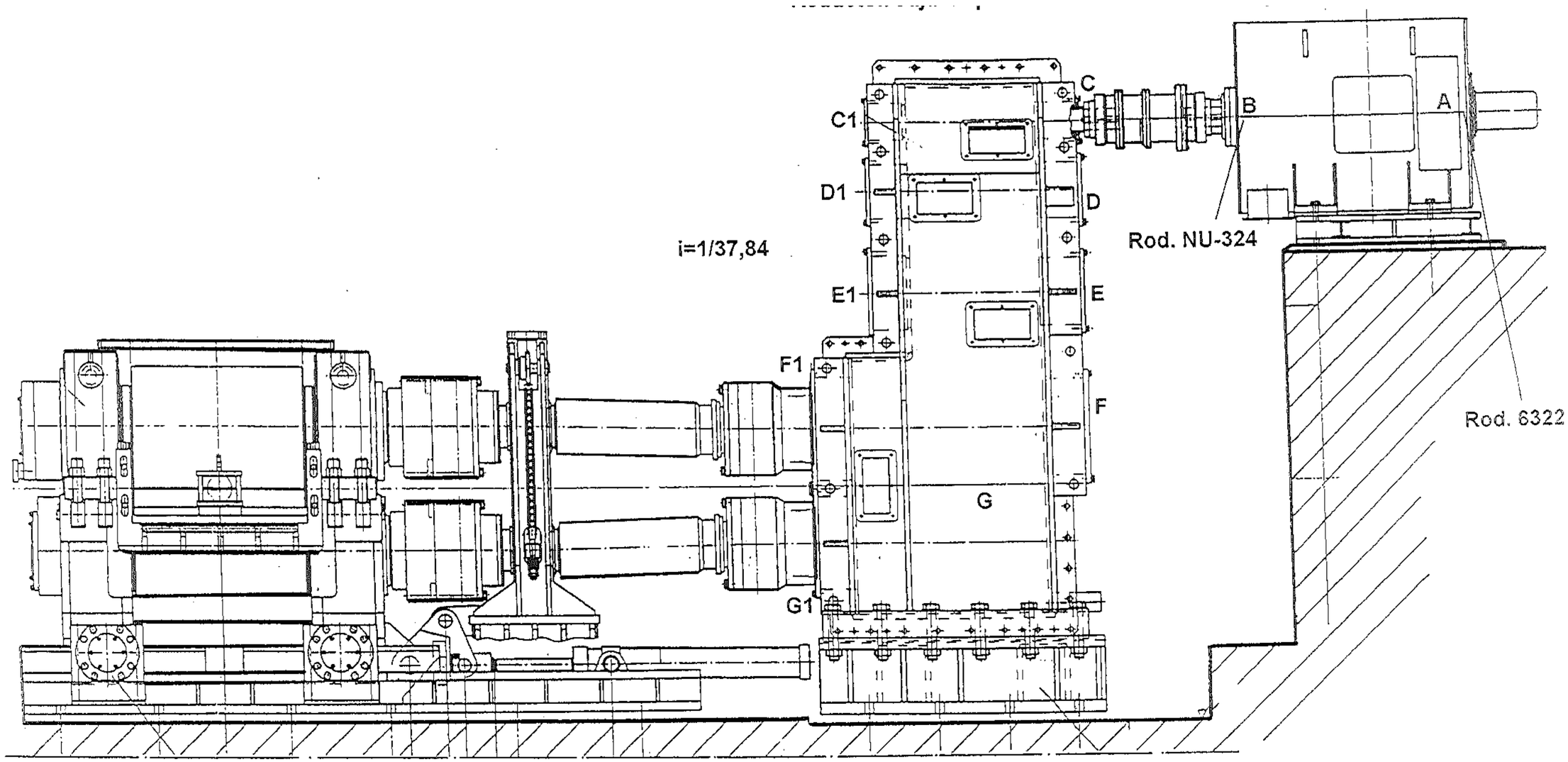

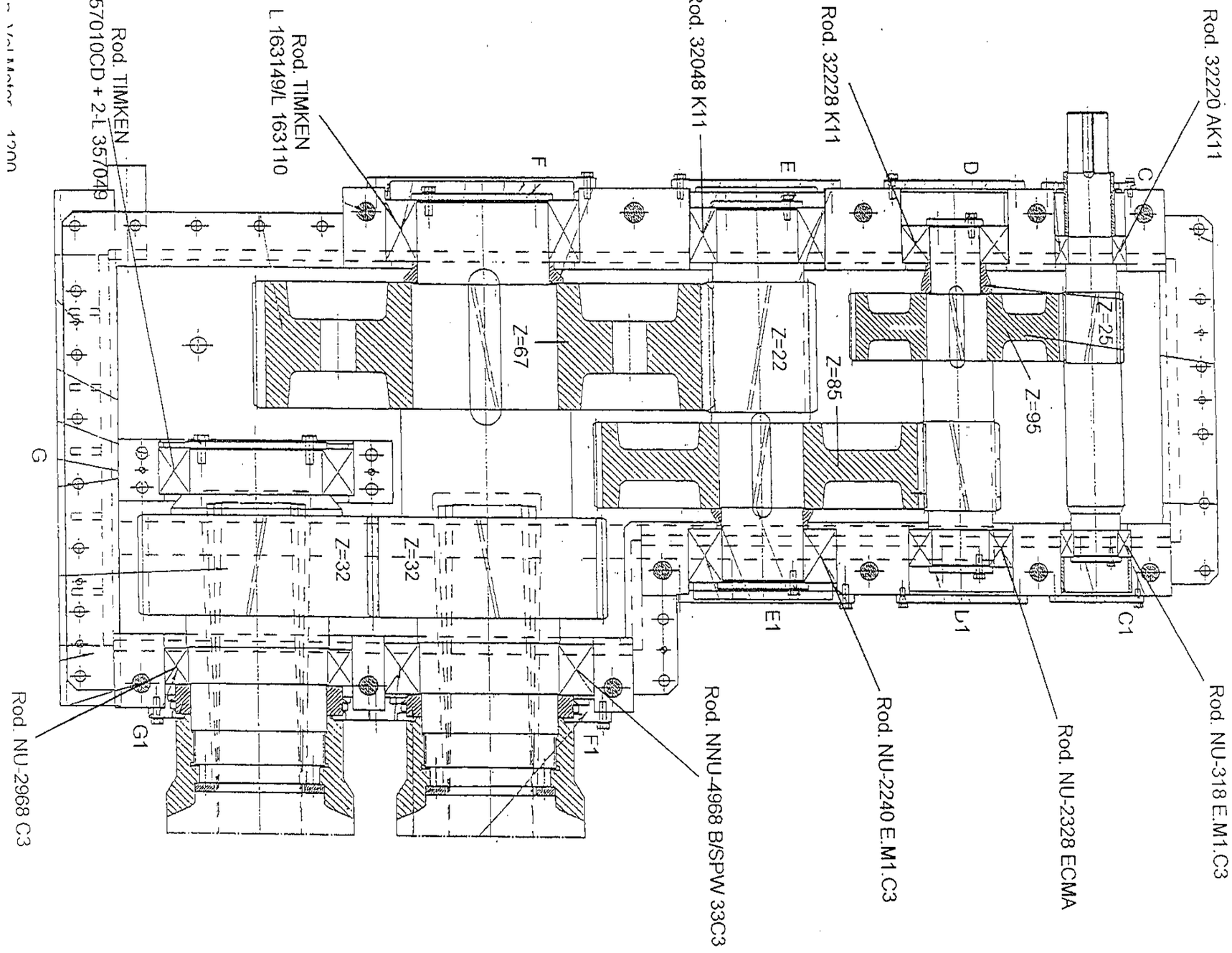
Rod. 32220 AK11
Rod. 32228 K11
Rod. 32048 K11
Rod. TIMKEN
L 163149/L 163110
Rod. TIMKEN
L 357010CD + 2-L 357049
Rod. NU-318 E.M1.C3
Rod. NU-2328 ECMA
Rod. NU-2240 E.M1.C3
Rod. NNU-4968 B/SPW 33C3
Rod. NU-2968 C3
C
C1
D
L1
E
E1
F
F1
G
G1
Z=25
Z=95
Z=85
Z=22
Z=67
Z=32
Z=32

ROUGH STANDS Nº 4

LAGUN-ARTEA machinery

Years of manufacturing 1993

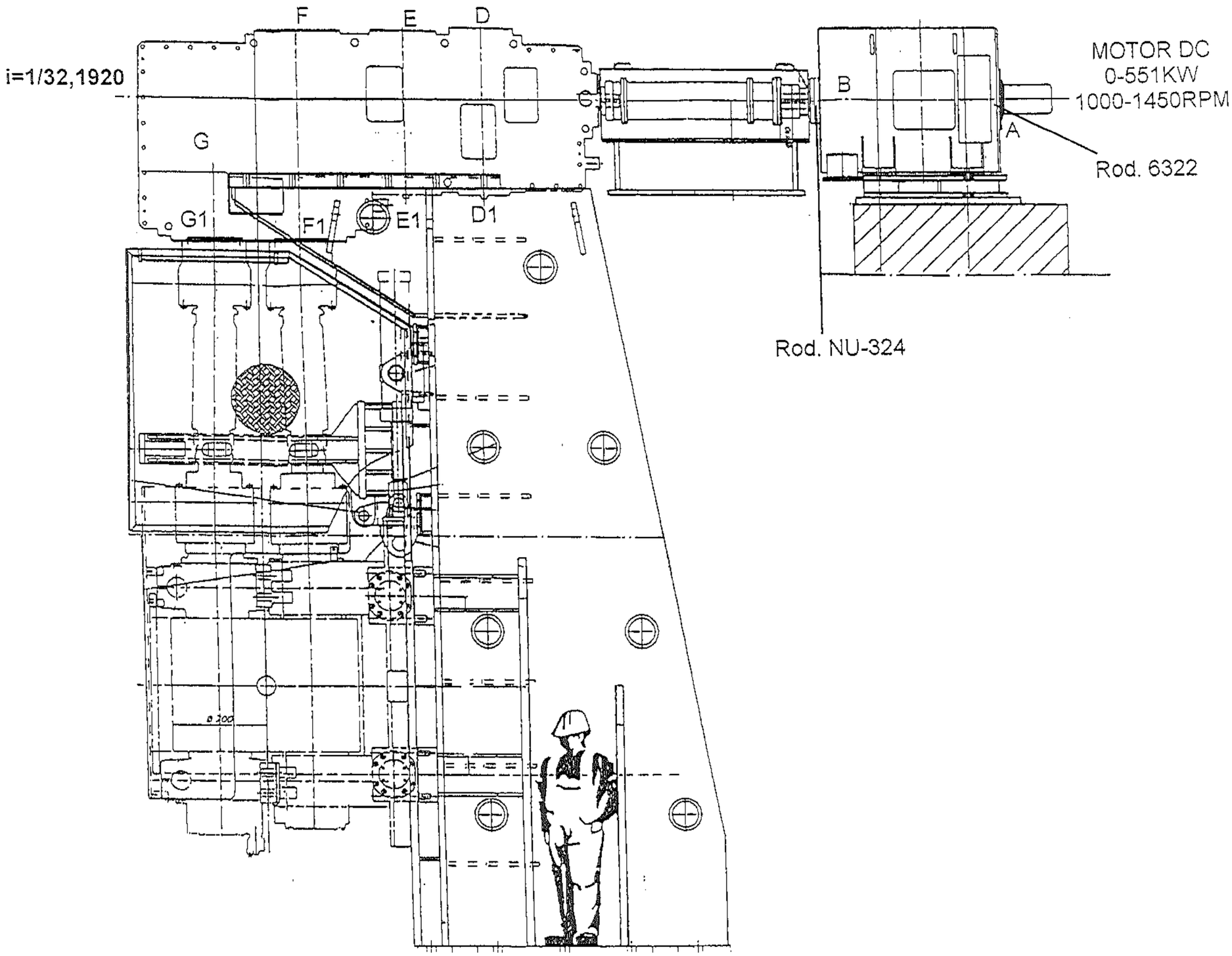

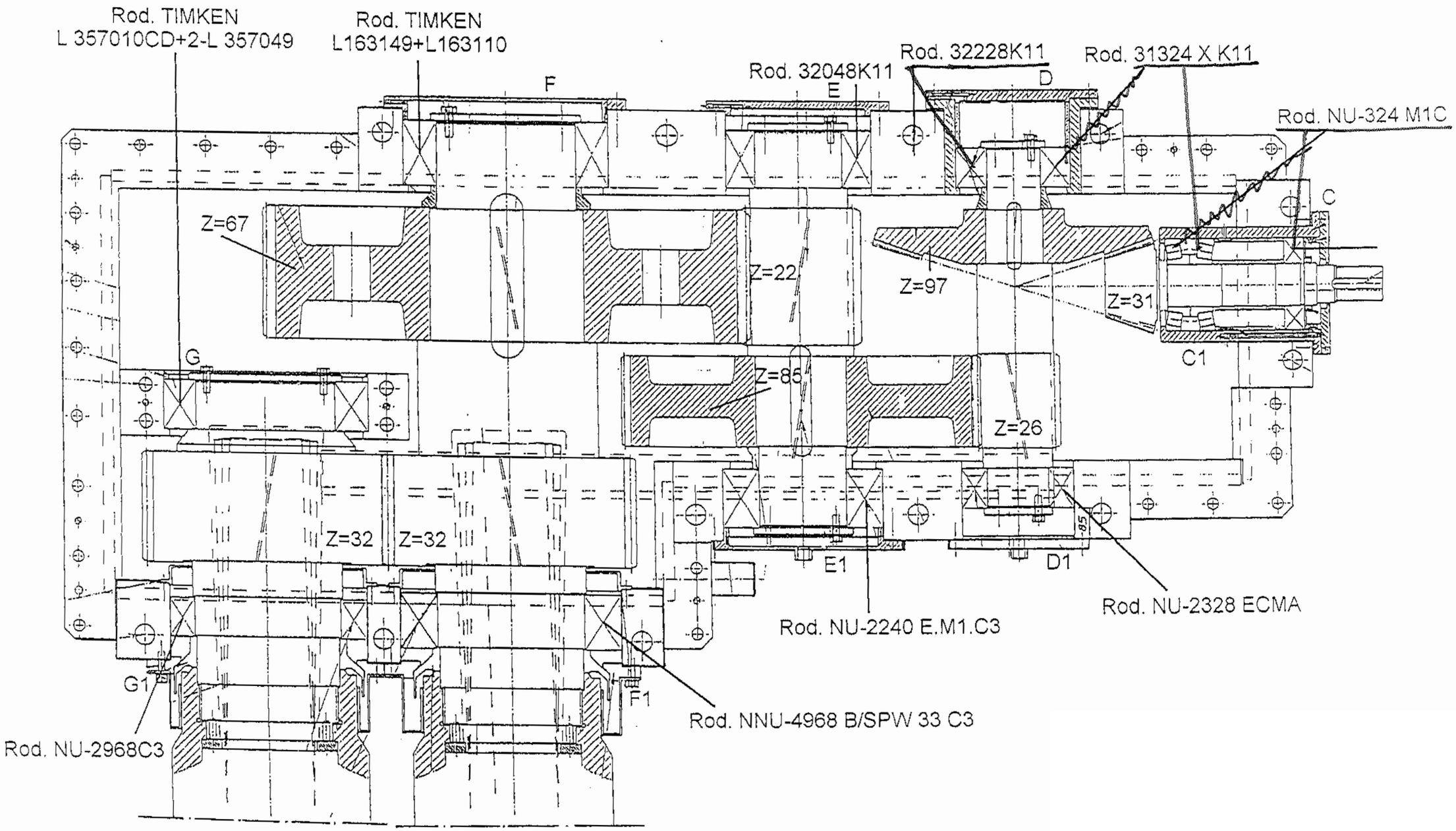
Rod. TIMKEN
L 357010CD+2-L 357049
Rod. TIMKEN
L163149+L163110
F
Rod. 32048K11
E
Rod. 32228K11
D
Rod. 31324 X K11
Rod. NU-324 M1C
C
Z=67
Z=22
Z=97
Z=31
C1
G
Z=85
Z=26
Z=32
Z=32
E1
D1
Rod. NU-2328 ECMA
Rod. NU-2240 E.M1.C3
G1
F1
Rod. NNU-4968 B/SPW 33 C3
Rod. NU-2968C3

ROUGH STANDS Nº 5

LAGUN-ARTEA machinery

Years of manufacturing 1993

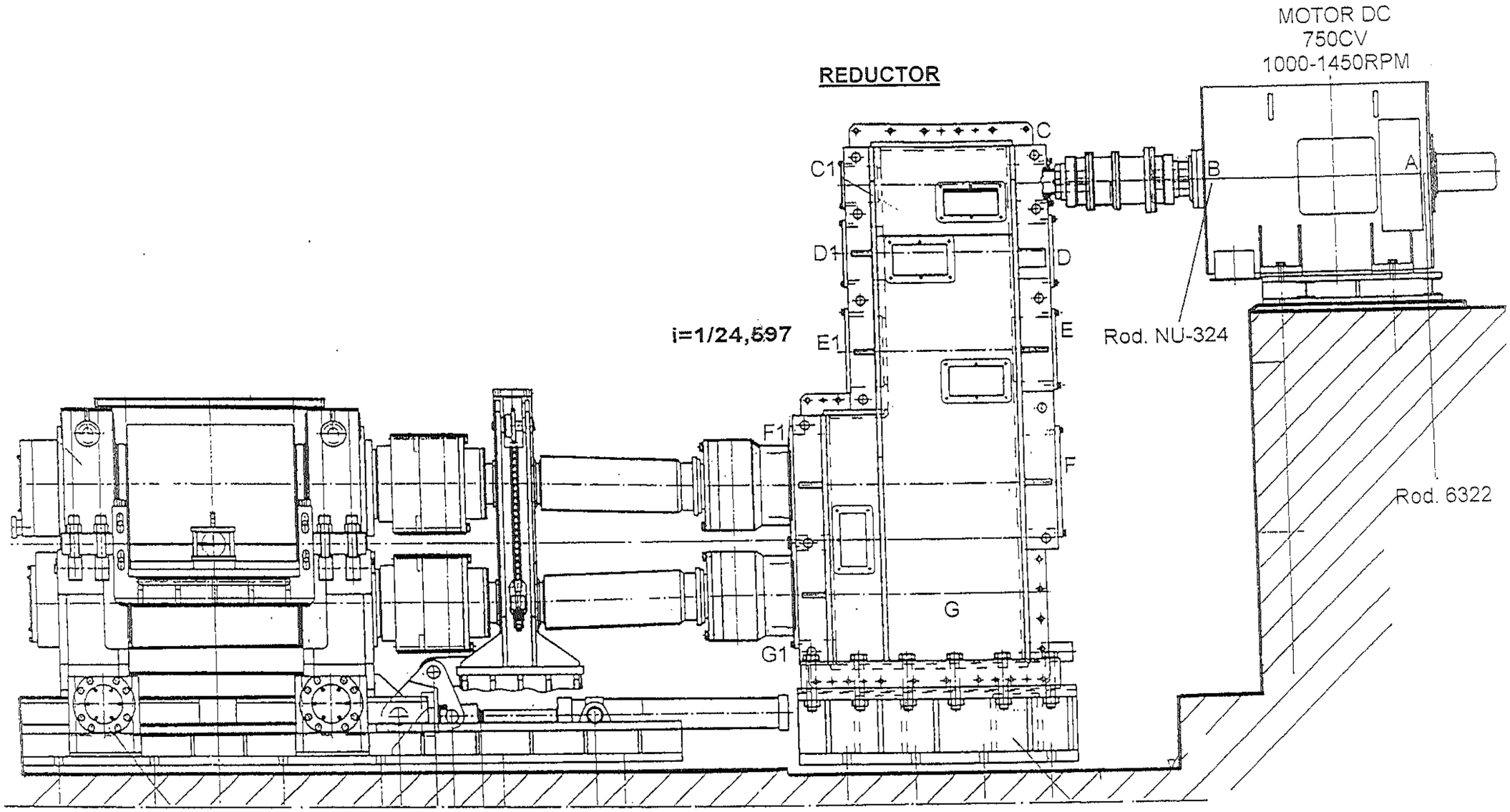

BIG STAND (ECCENTRIC) Nº 0-1-2

LAGUN-ARTEA machinery

Years of manufacturing 1993

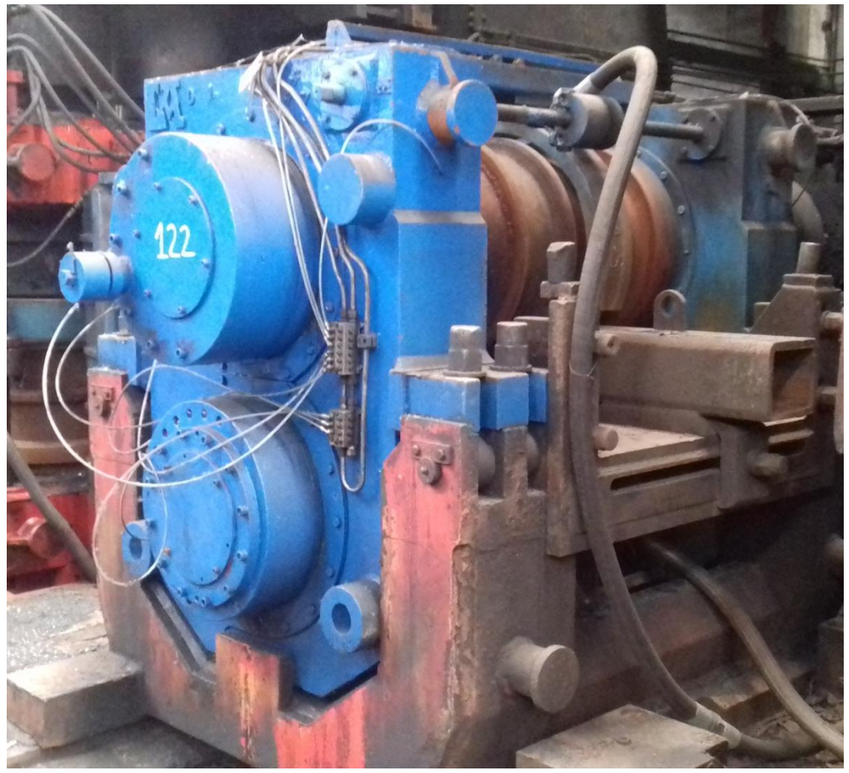

SMALL STAND (SPINDLE) Nº 3-4-5

LAGUN-ARTEA machinery

Years of manufacturing 1993

BIG MILL SPINDLE STAND Nº 0-1-2

JAURE manufacturing Model ALST-580

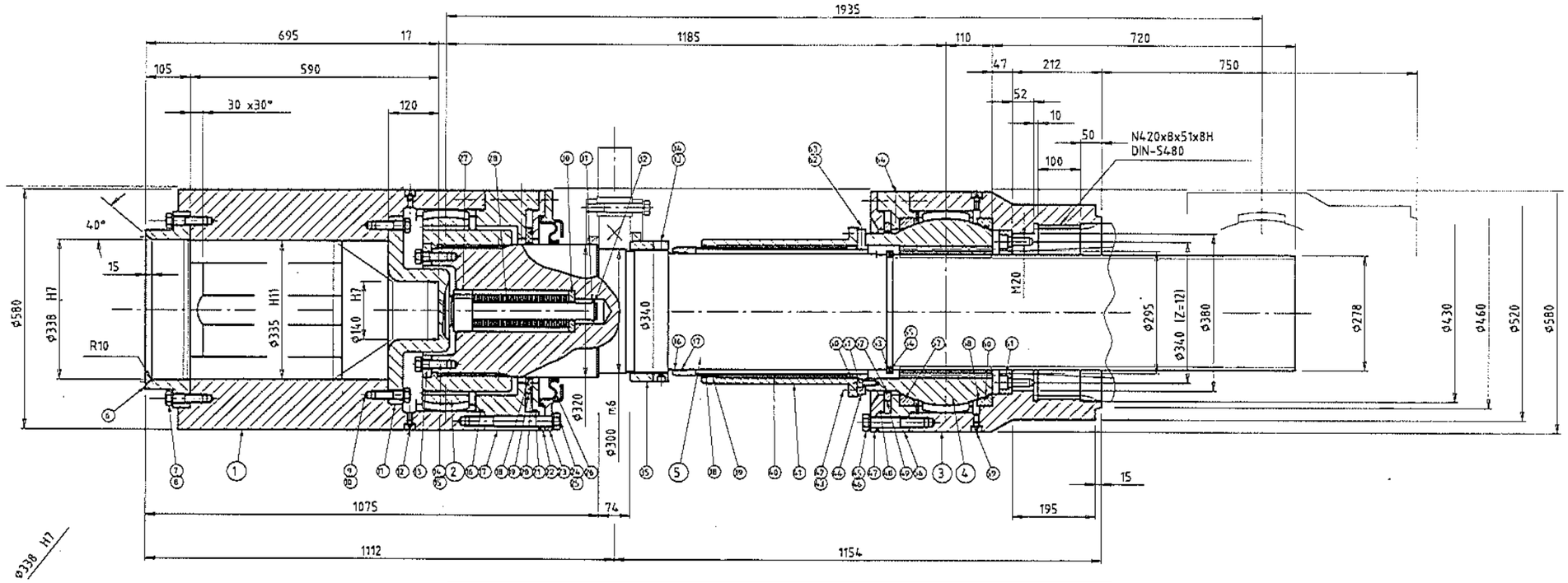

SMALL MILL SPINDLE STAND Nº 3-4-5

JAURE manufacturing Model ALST-465

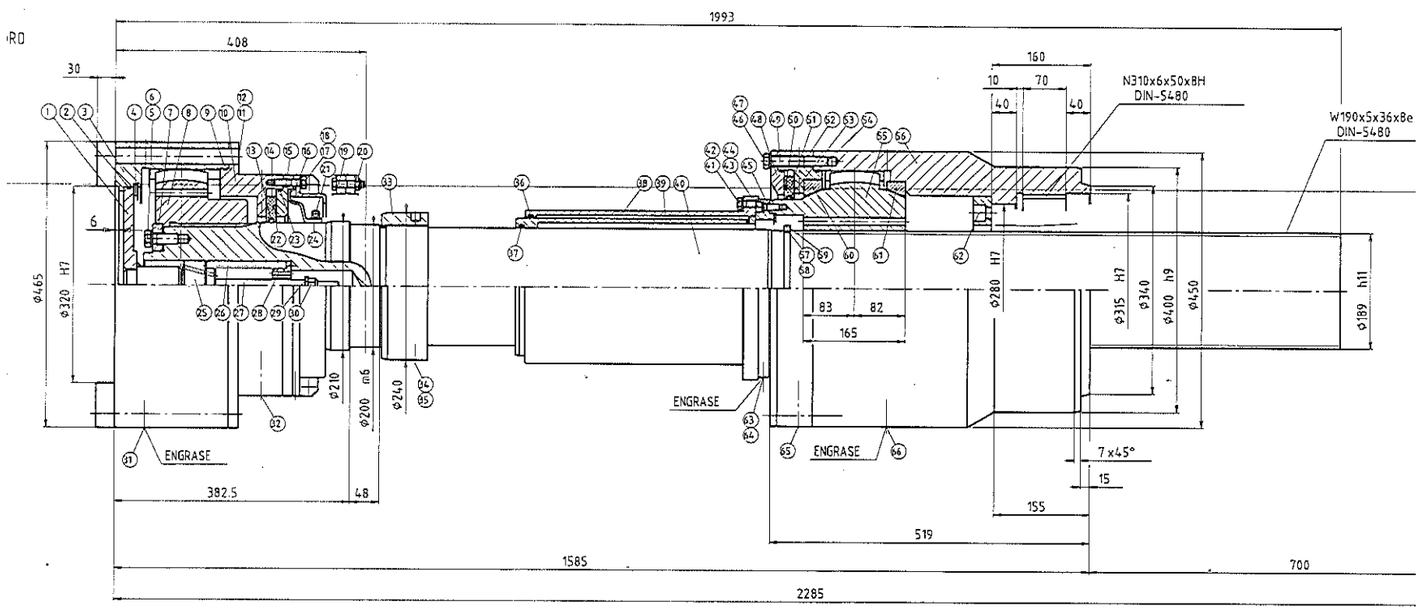

SHEAR Nº 6

DEMAG machinery

Years of manufacturing 1990 ?

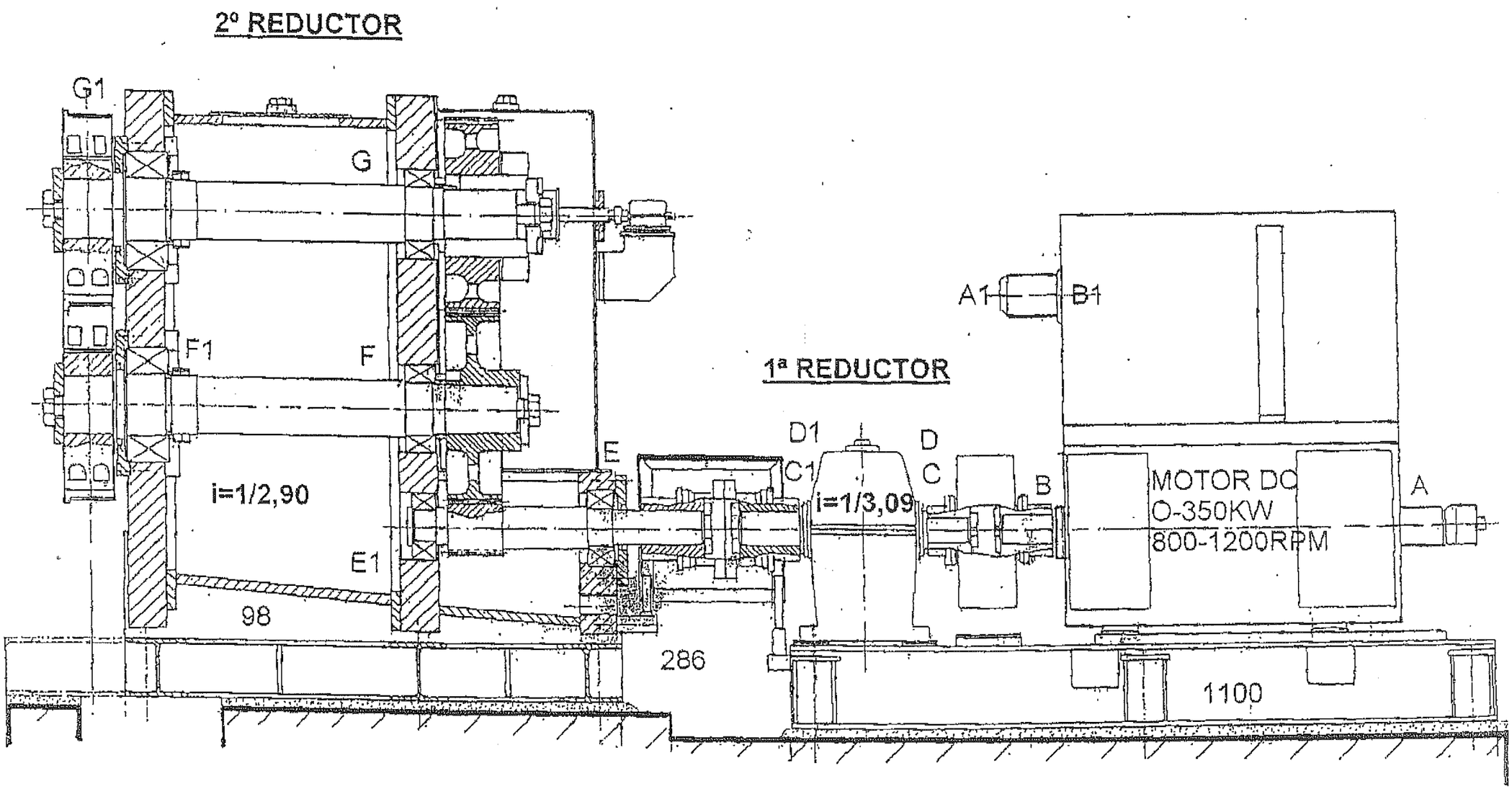

1 er INTERMEDIATE STANDS LAGUN-ARTEA / MORGAN

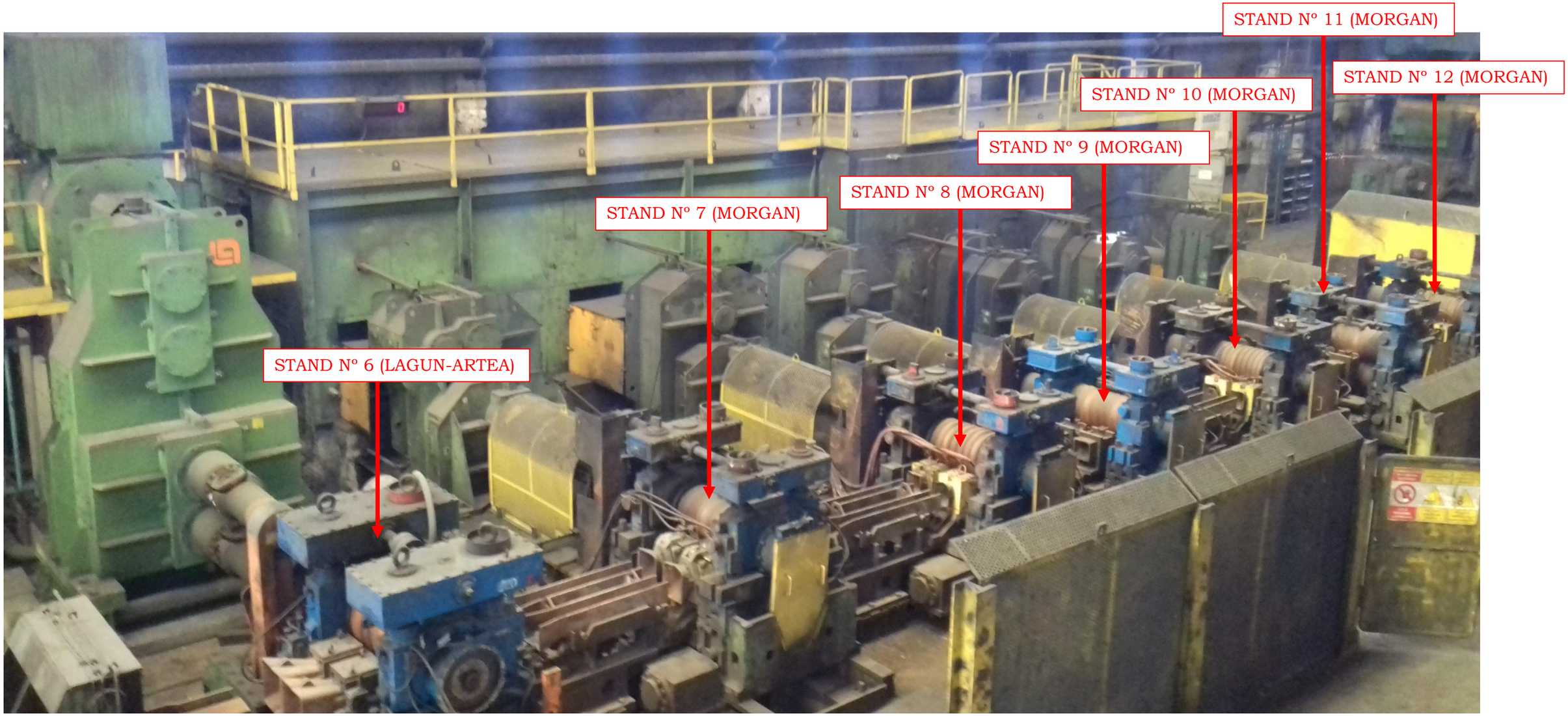

LAGUN-ARTEA machinery

Years of manufacturing 2013

AT THE MOMENT THERE IS NO DOCUMENTATION

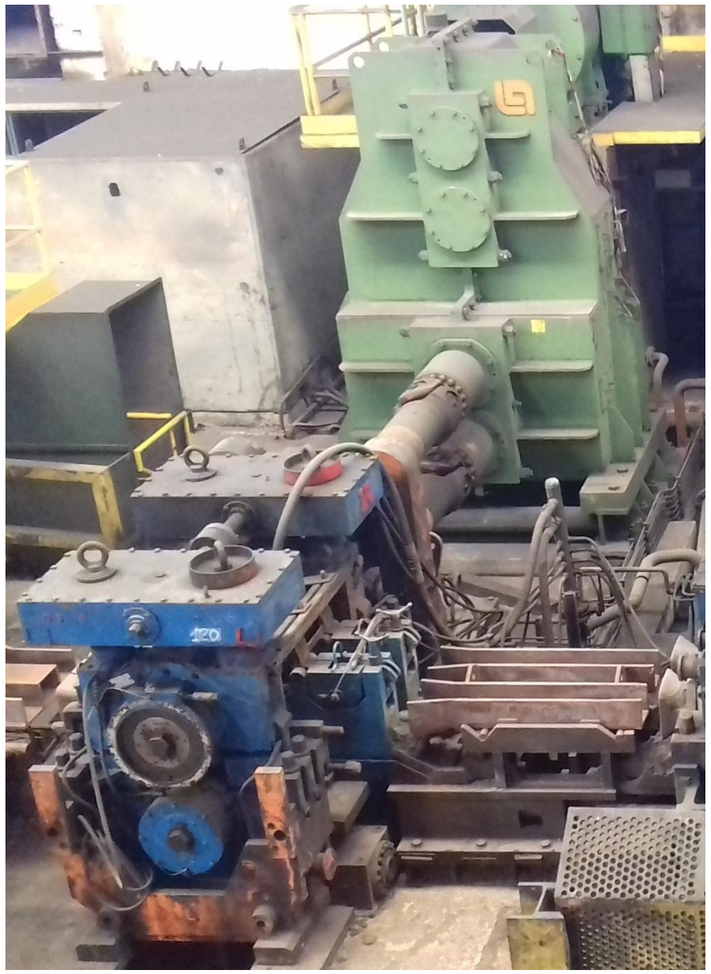

1 er INTERMEDIATE STANDS N°7-8-9-10-11-12

MORGAN machinery

Years of manufacturing 2005

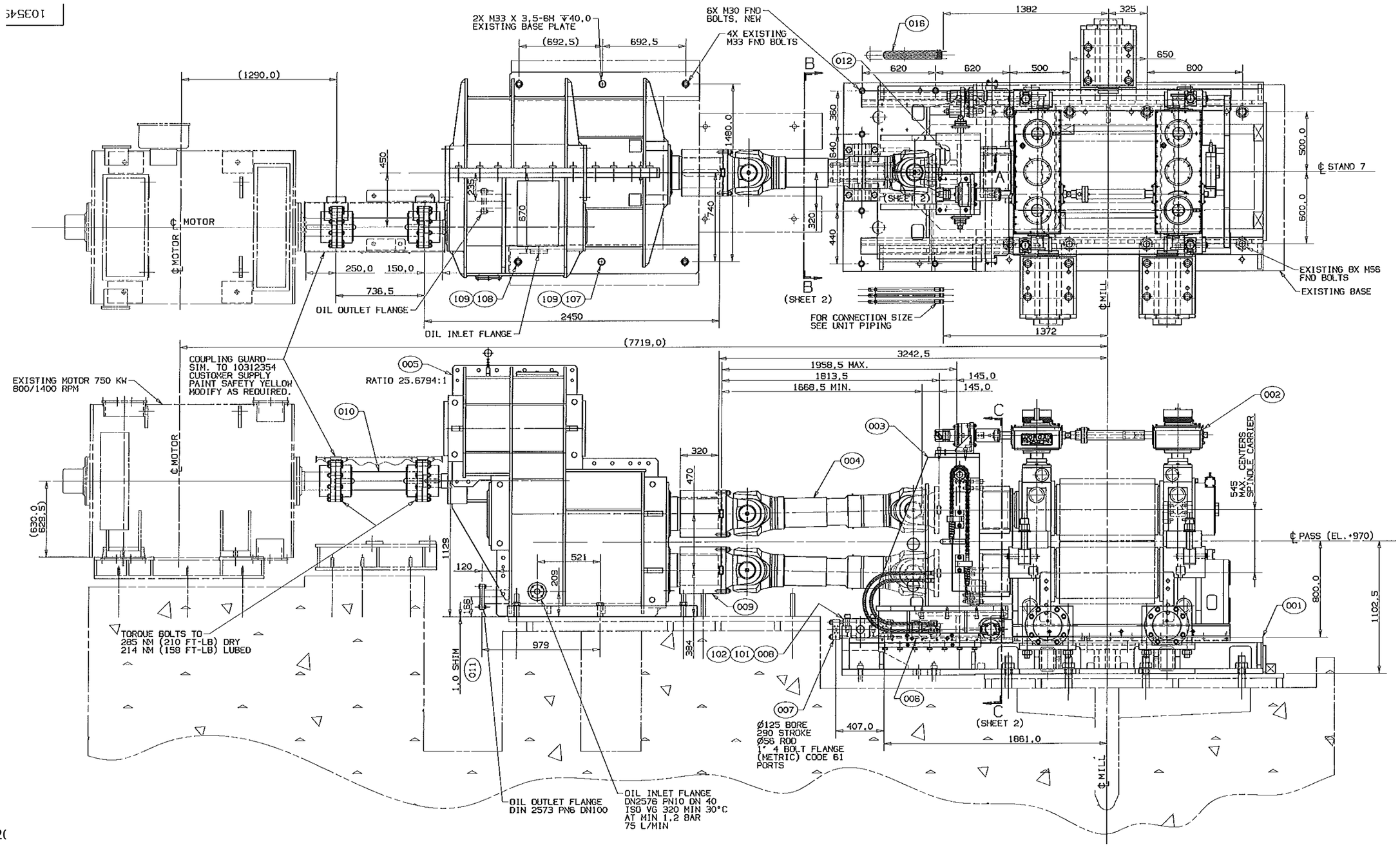

1 er INTERMEDIATE REDUCER N°7

MORGAN (EGT) machinery

Years of manufacturing 2005

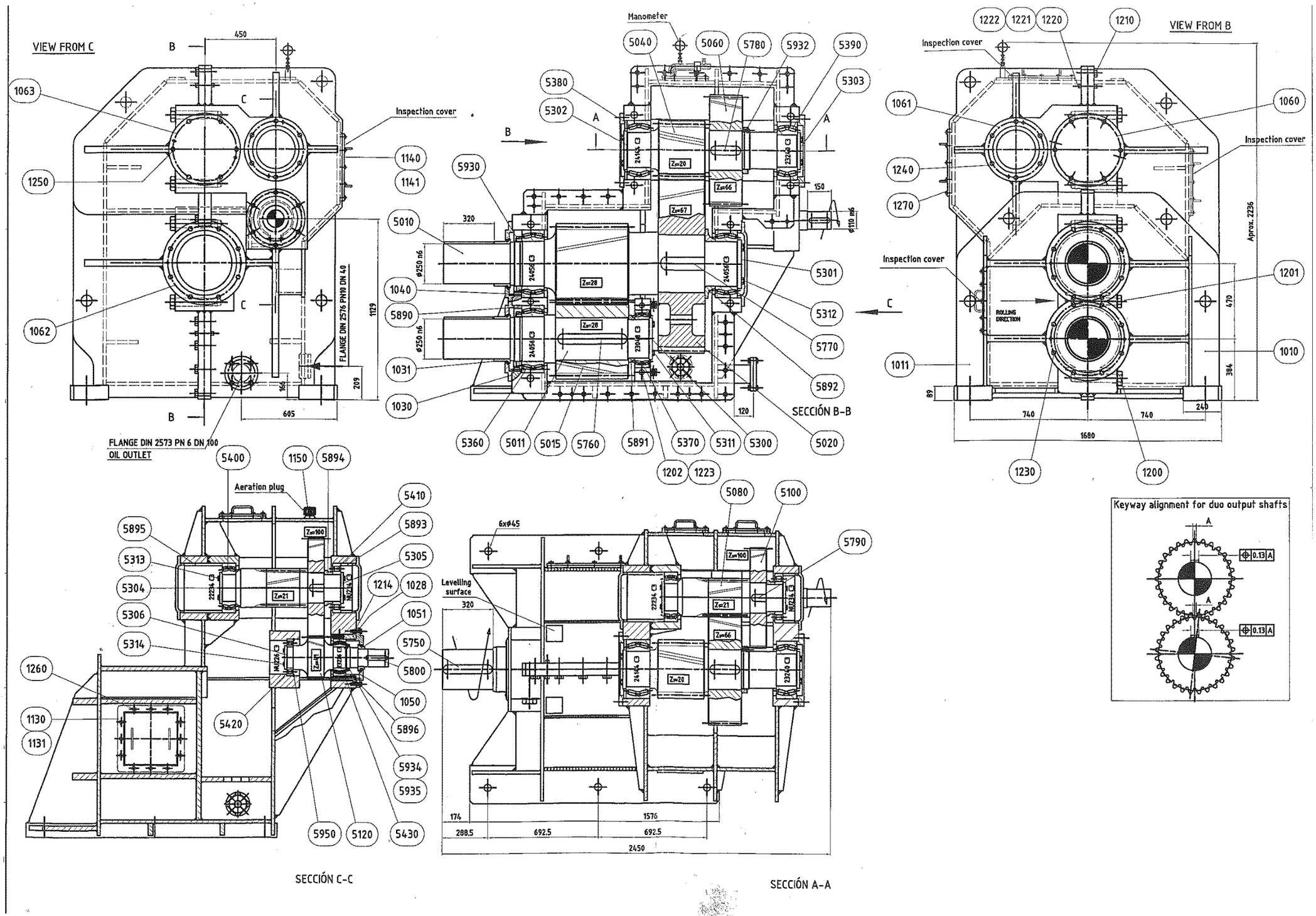

1 er INTERMEDIATE REDUCER N°8

MORGAN (EGT) machinery

Years of manufacturing 2005

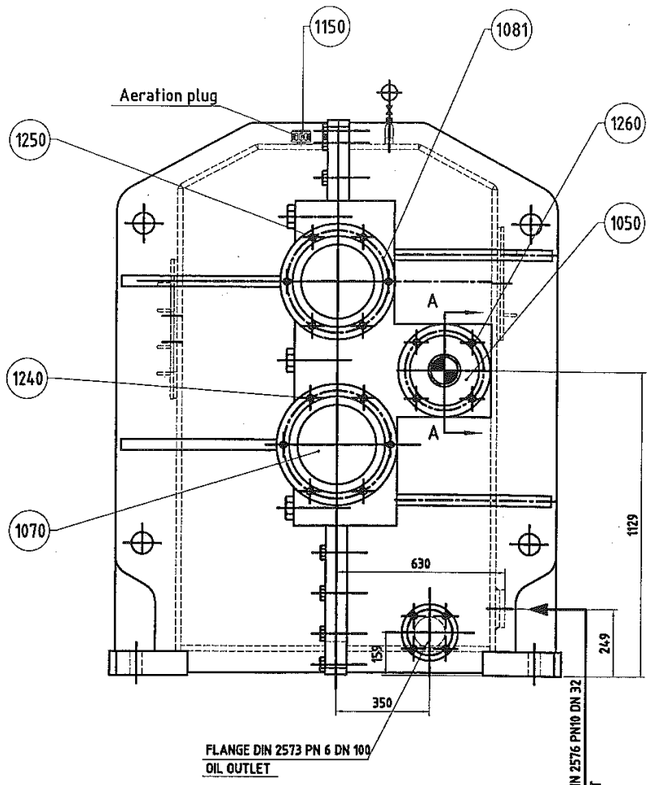

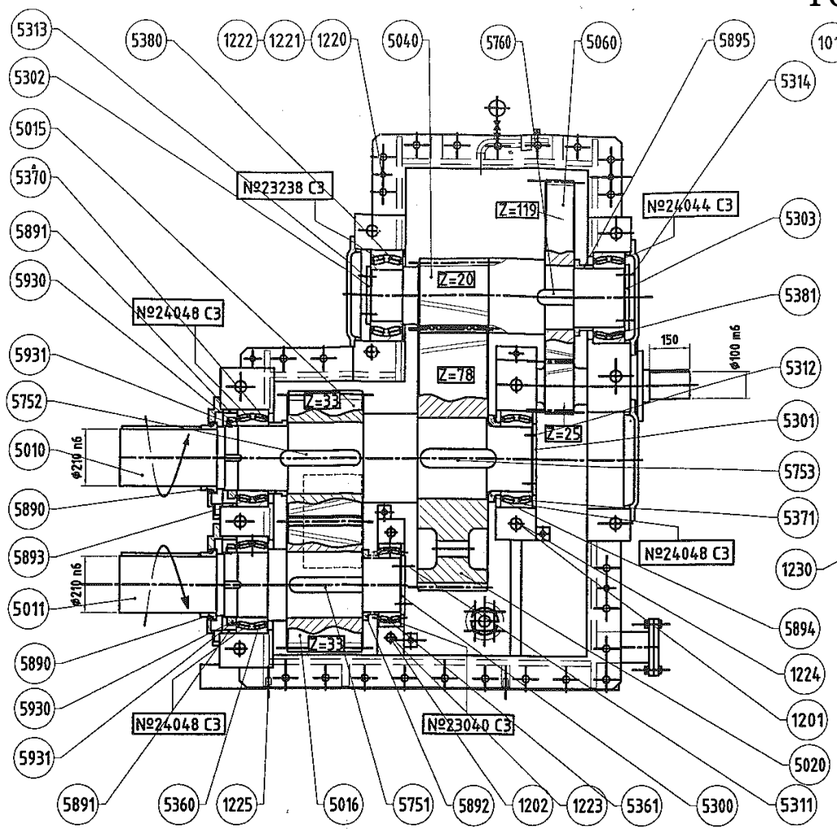

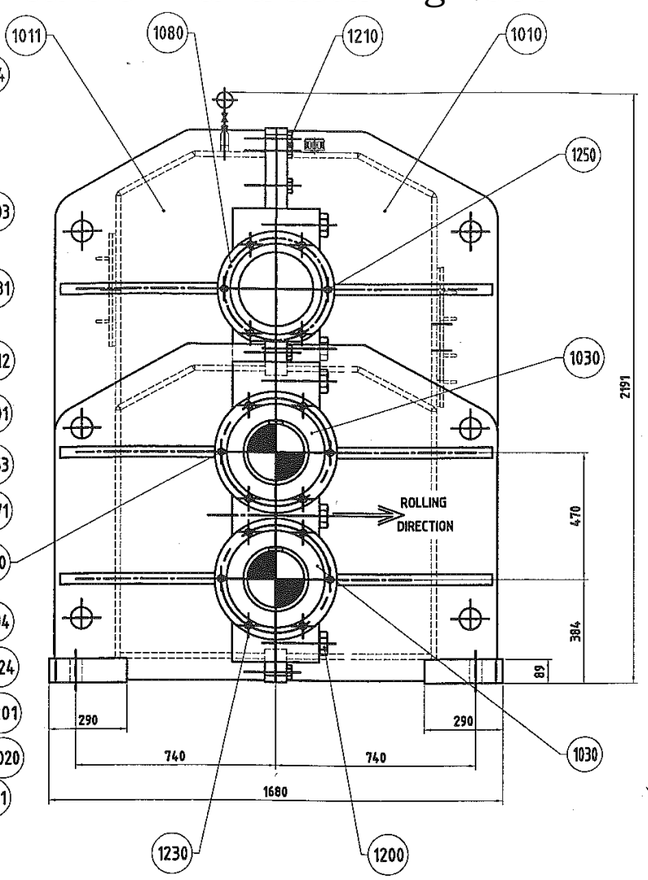

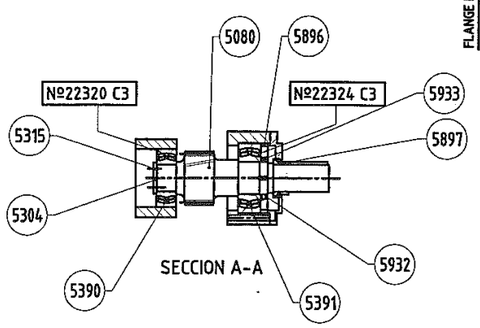

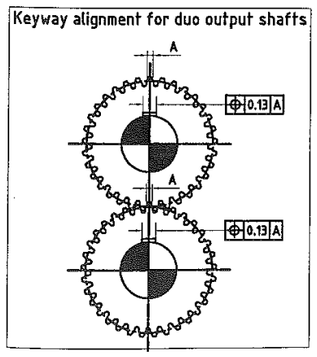

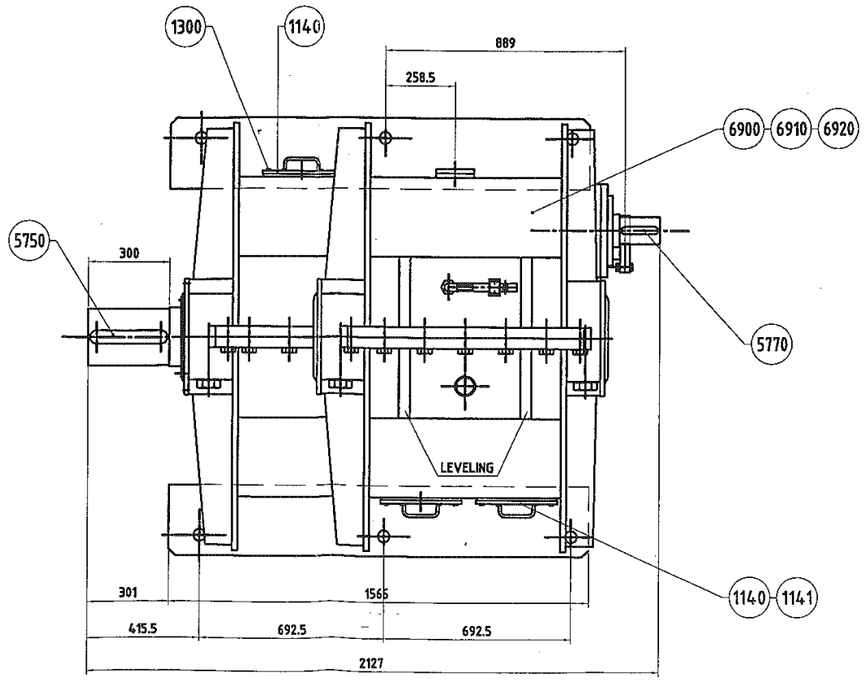

1 er INTERMEDIATE REDUCER Nº9

MORGAN (EGT) machinery

Years of manufacturing 2005

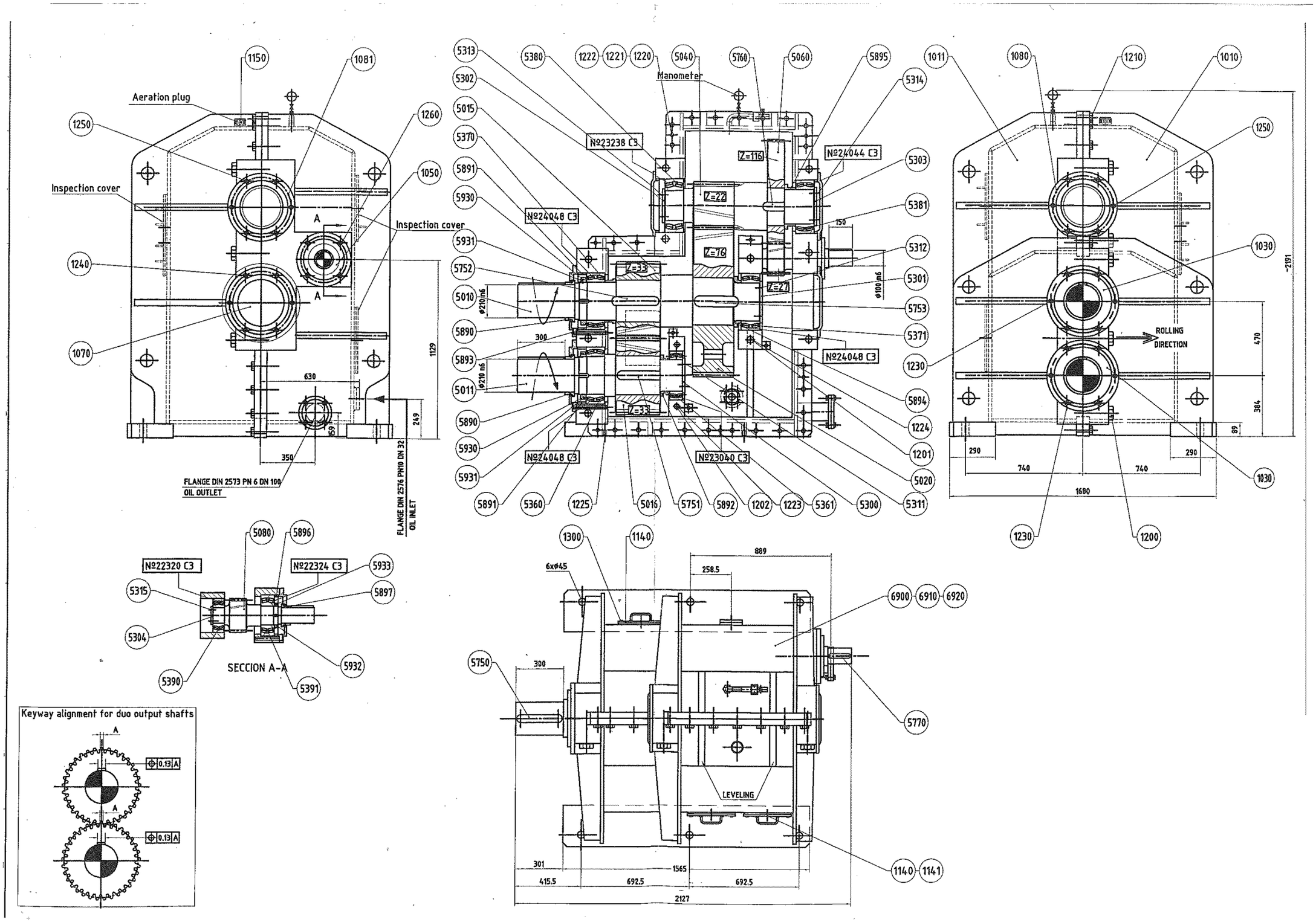

1 er INTERMEDIATE REDUCER N°10

MORGAN (EGT) machinery

Years of manufacturing 2005

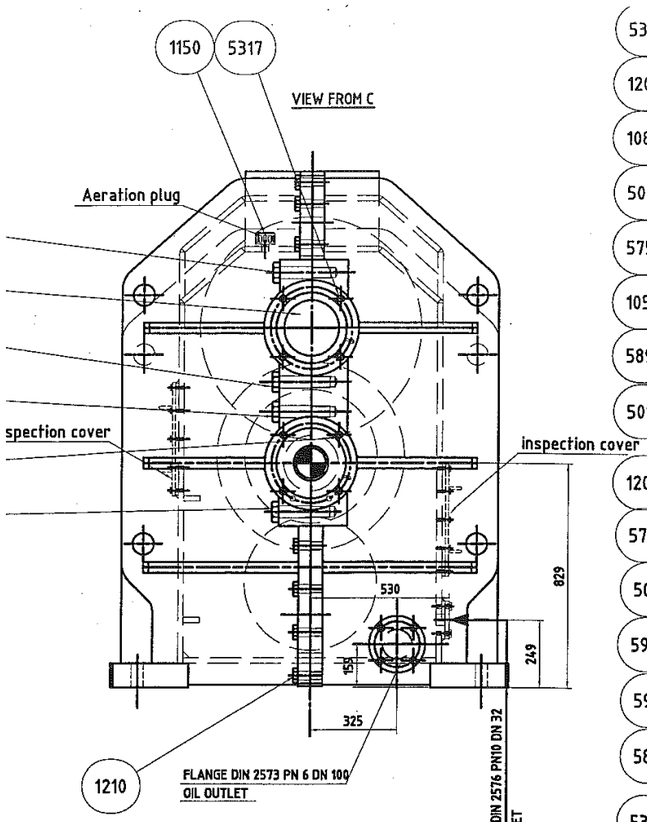

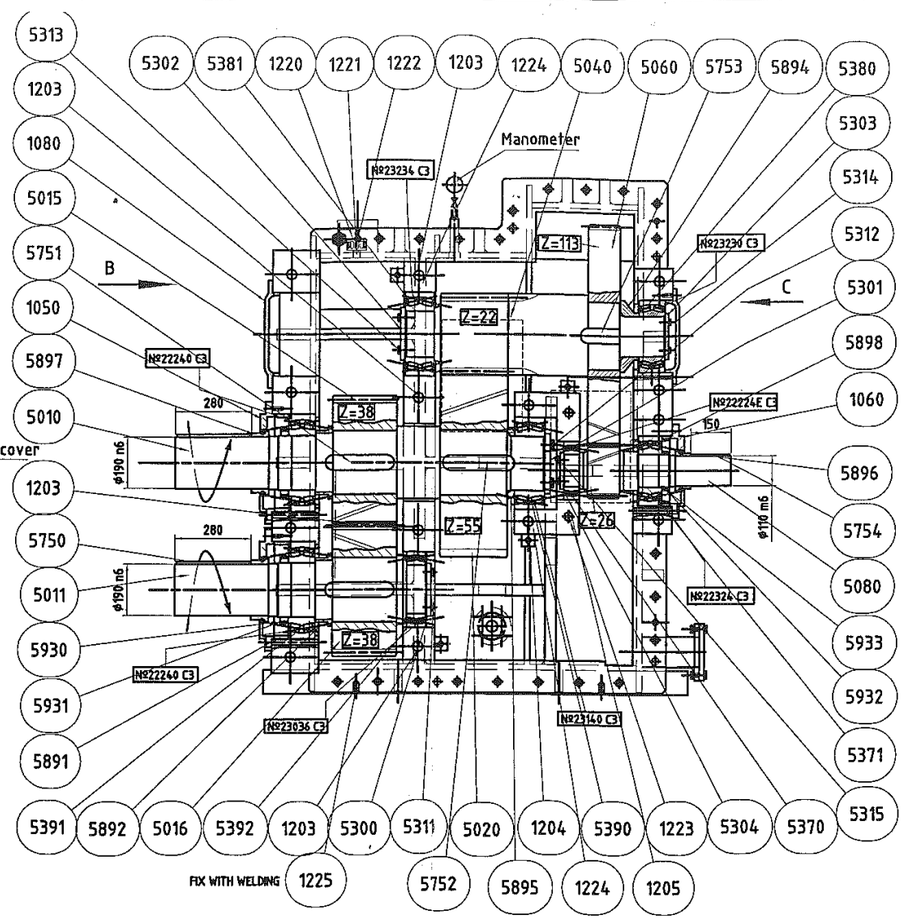

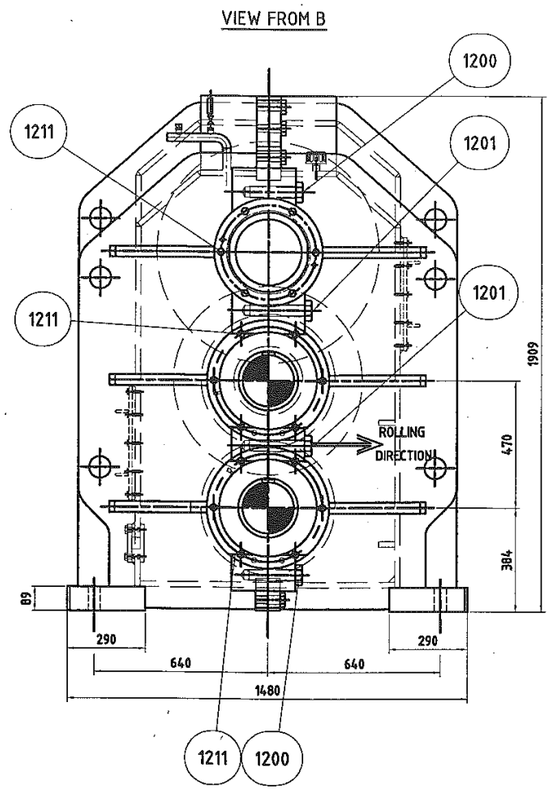

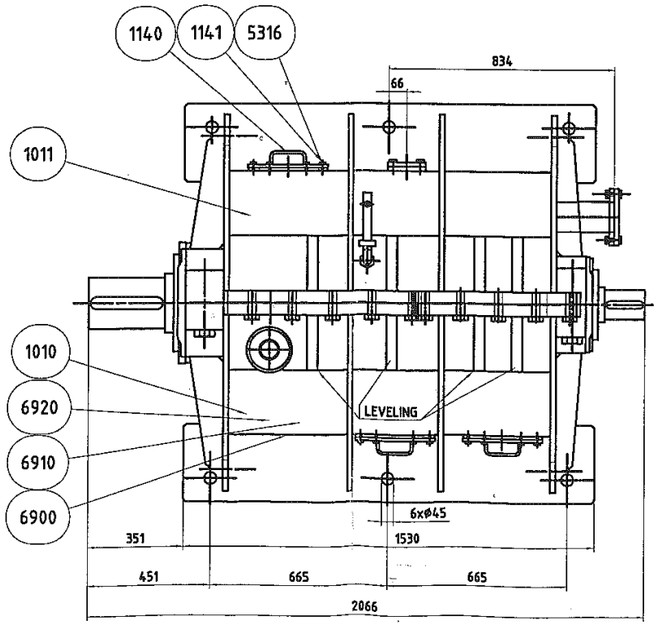

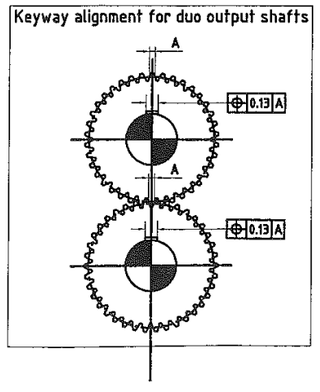

1 er INTERMEDIATE REDUCER N°11

MORGAN (EGT) machinery

Years of manufacturing 2005

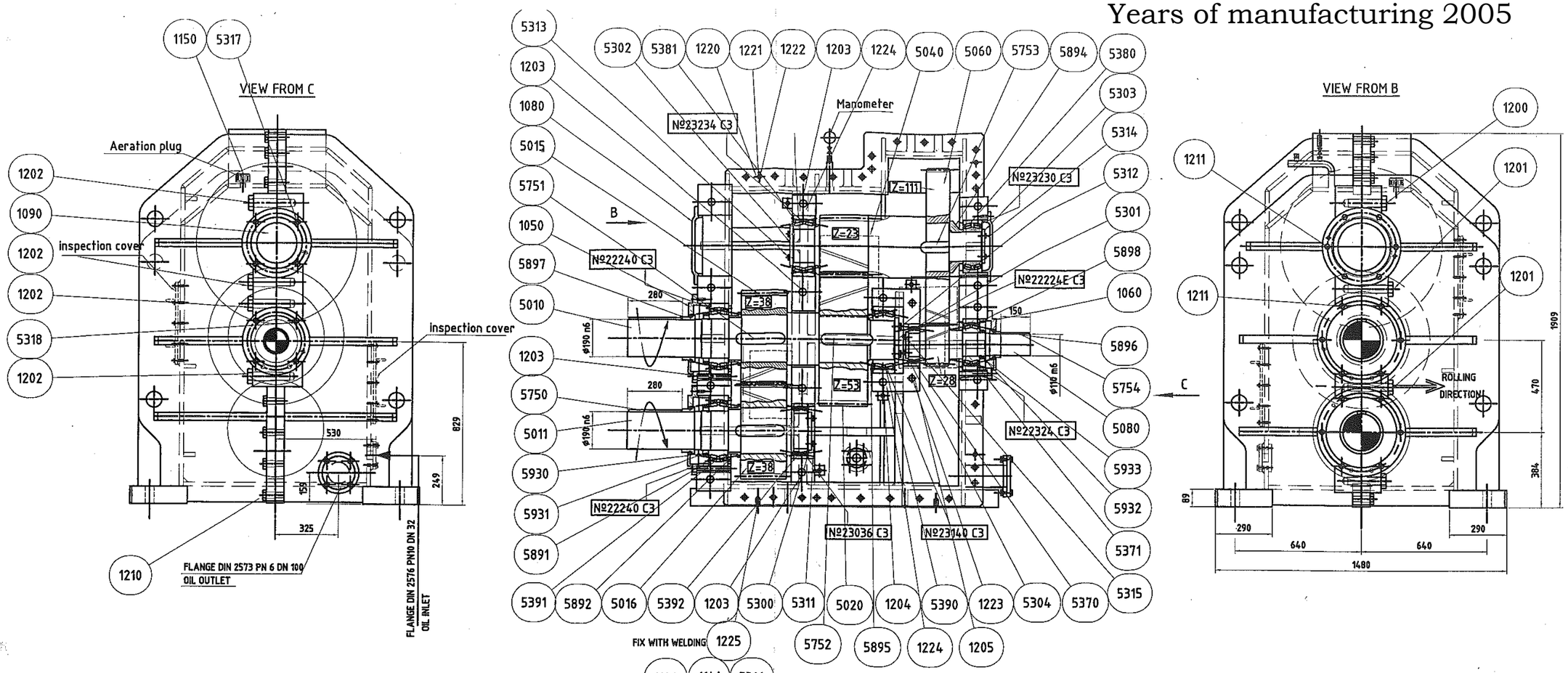

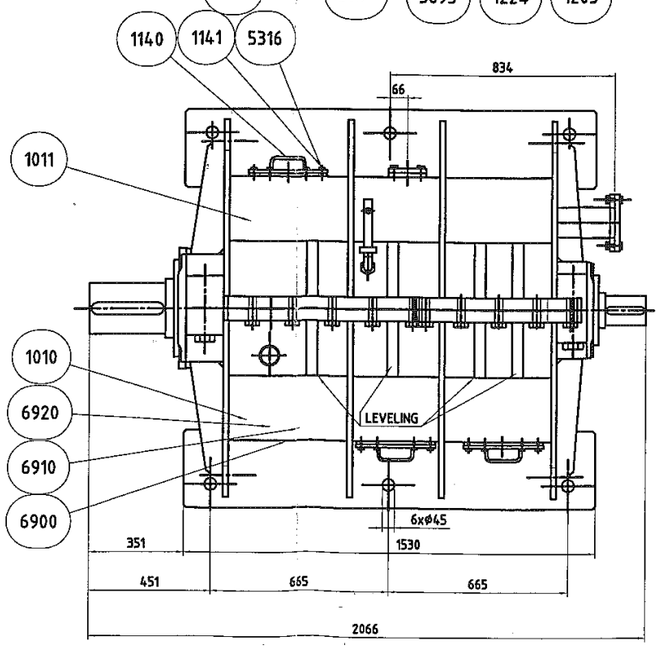

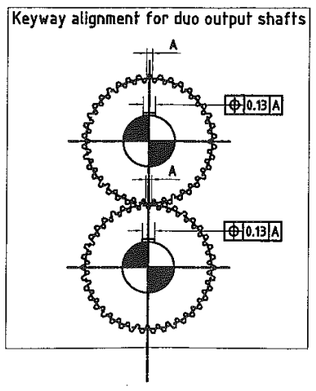

1 er INTERMEDIATE REDUCER N°12

MORGAN (EGT) machinery

Years of manufacturing 2005

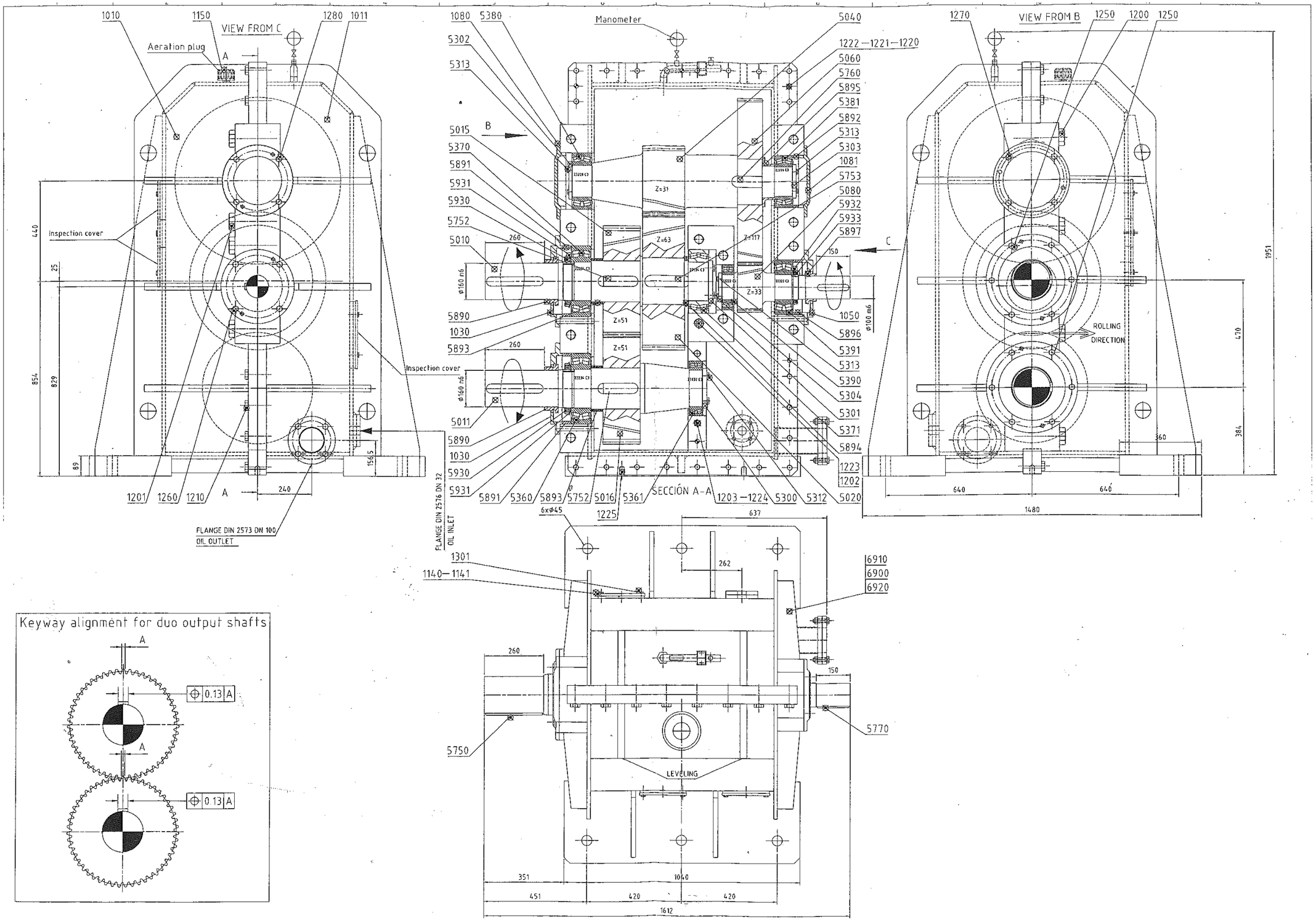

1 er INTERMEDIATE STANDS N°7-8

MORGAN machinery Model NH28

Years of manufacturing 2005

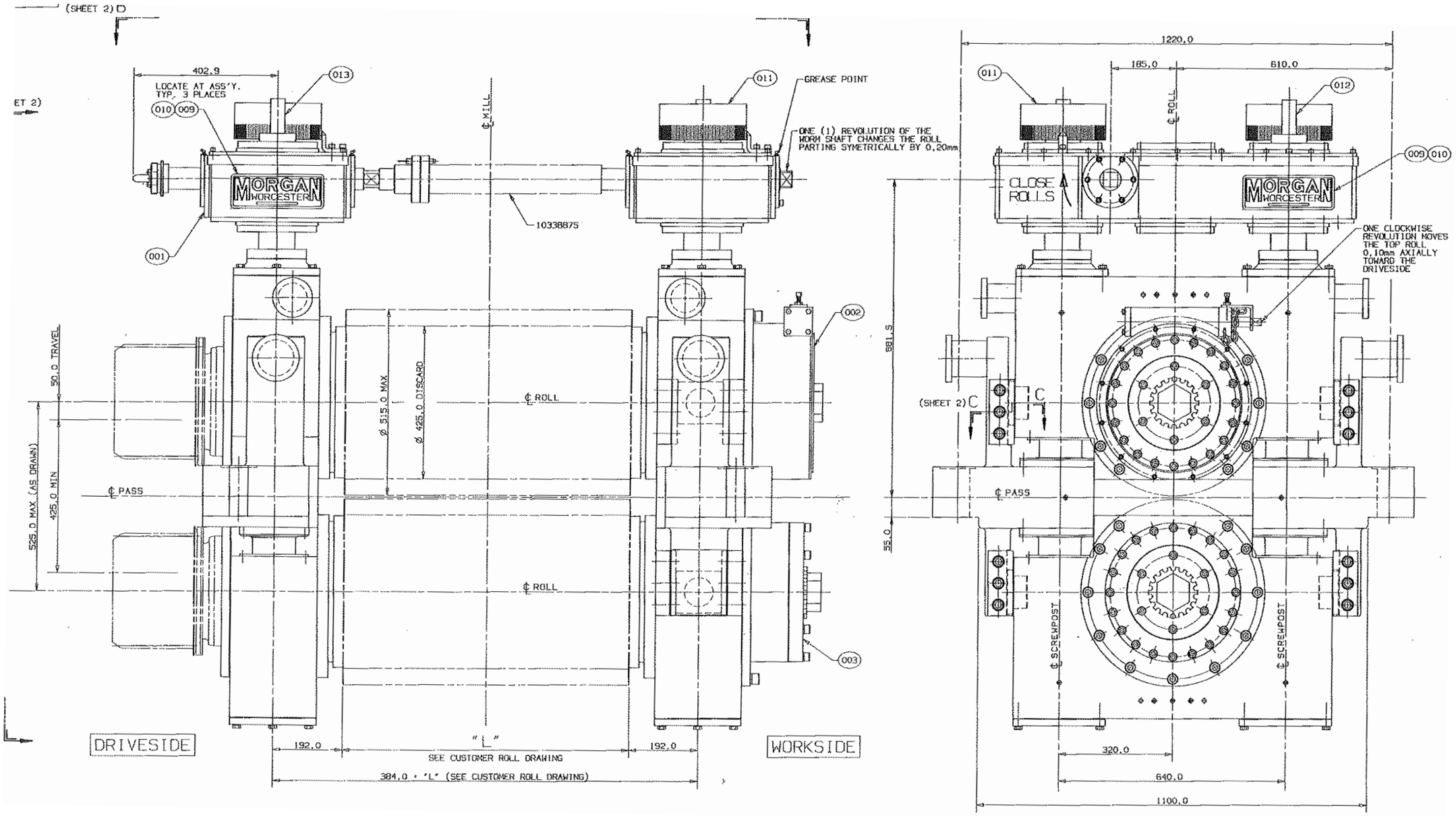

1 er INTERMEDIATE STANDS N°9-10-11-12

MORGAN machinery Model NH23

Years of manufacturing 2005

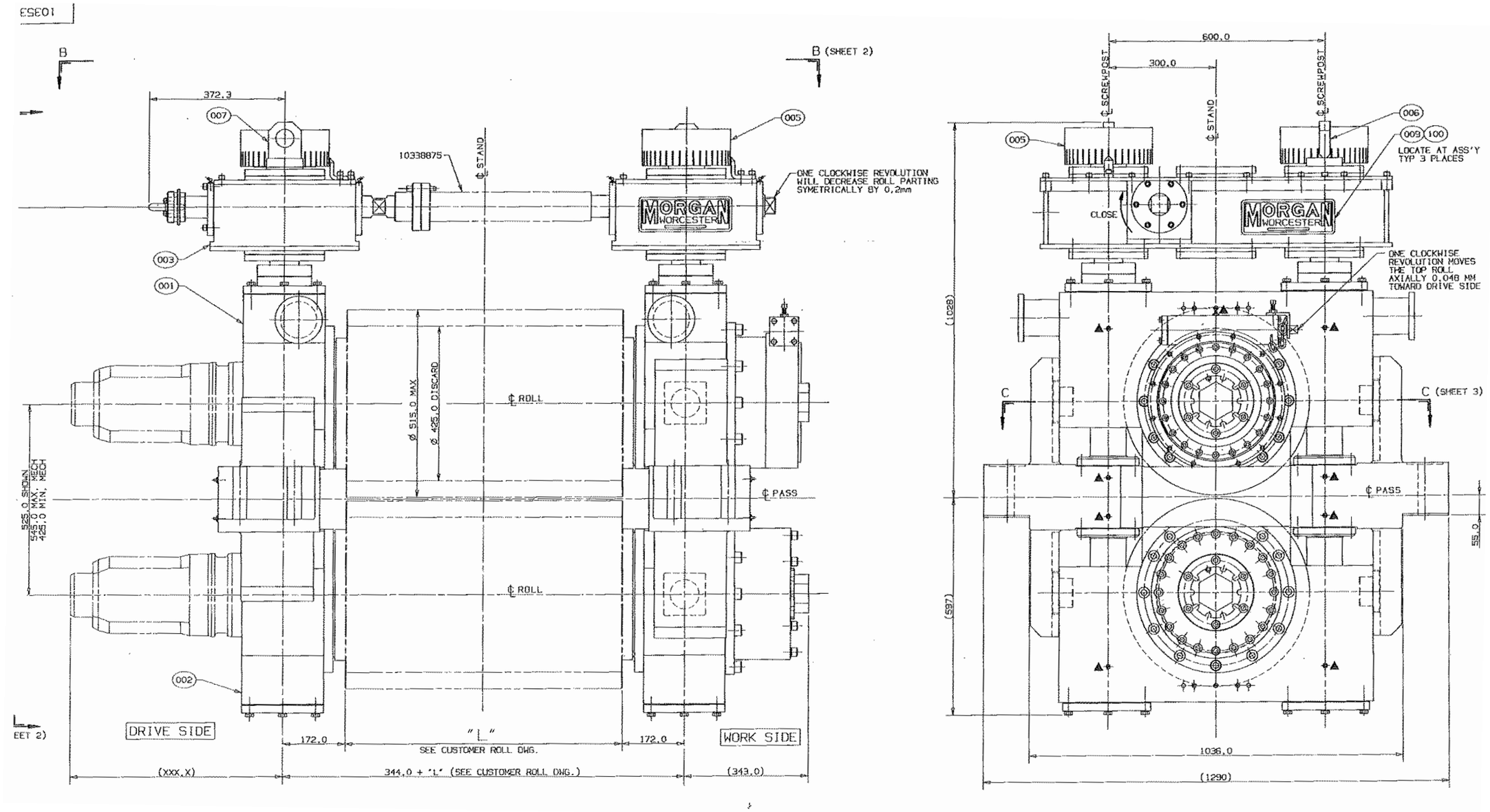

1 er INTERMEDIATE STANDS

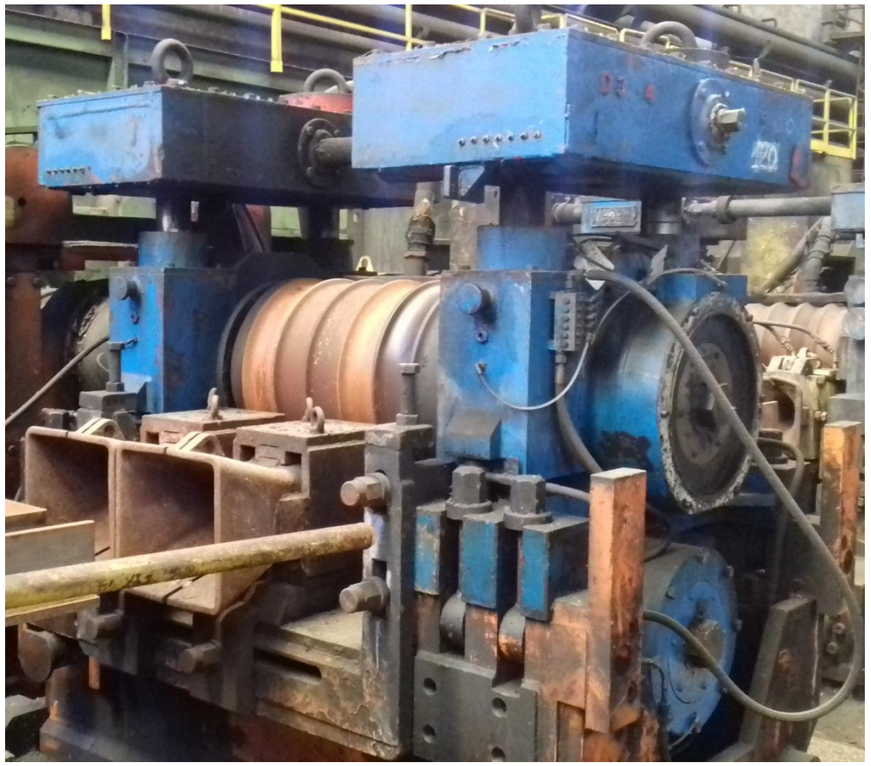

LAGUN -ARTEA STAND

Stands nº 3-4-5-6

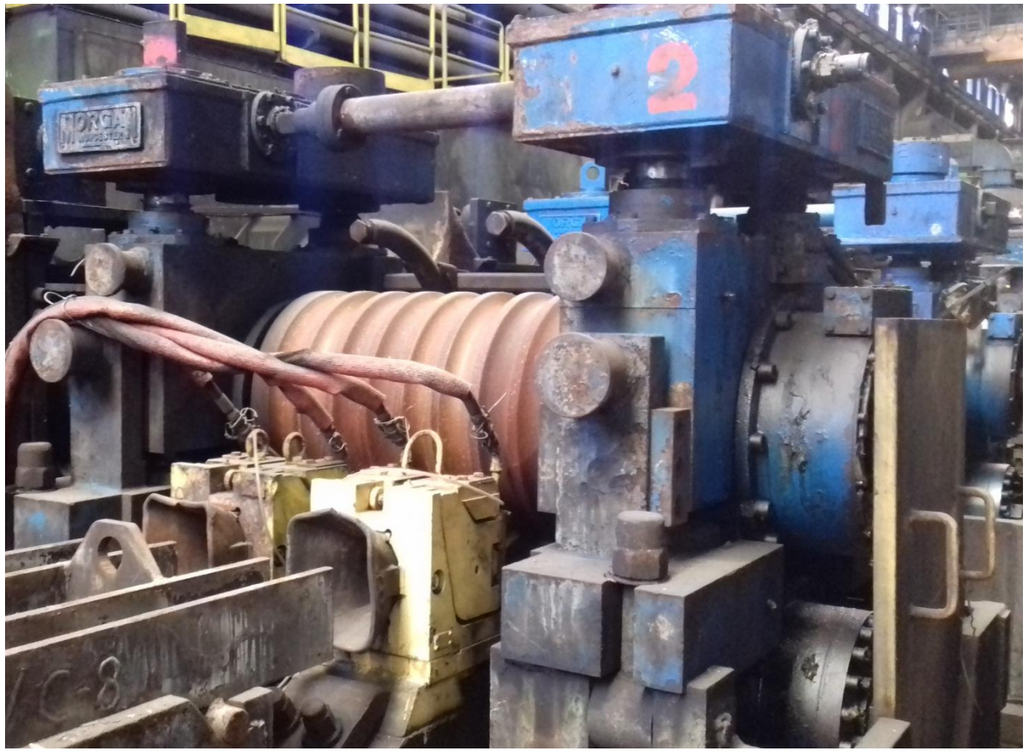

MORGAN STAND Model NH28

Stands nº 7-8

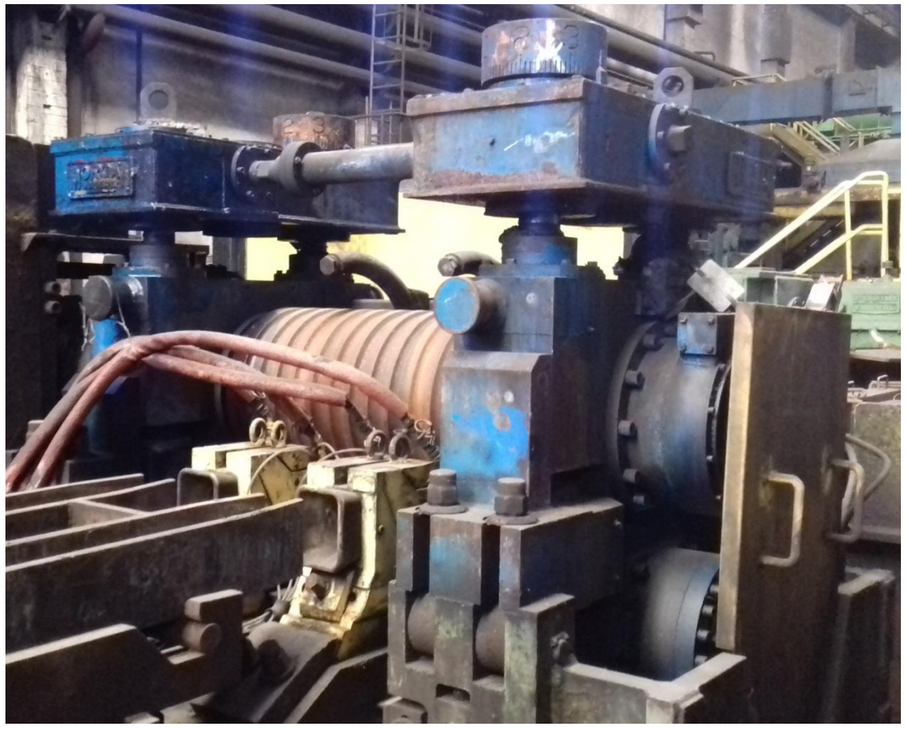

MORGAN STAND Model NH23

Stands nº 9-10-11-12

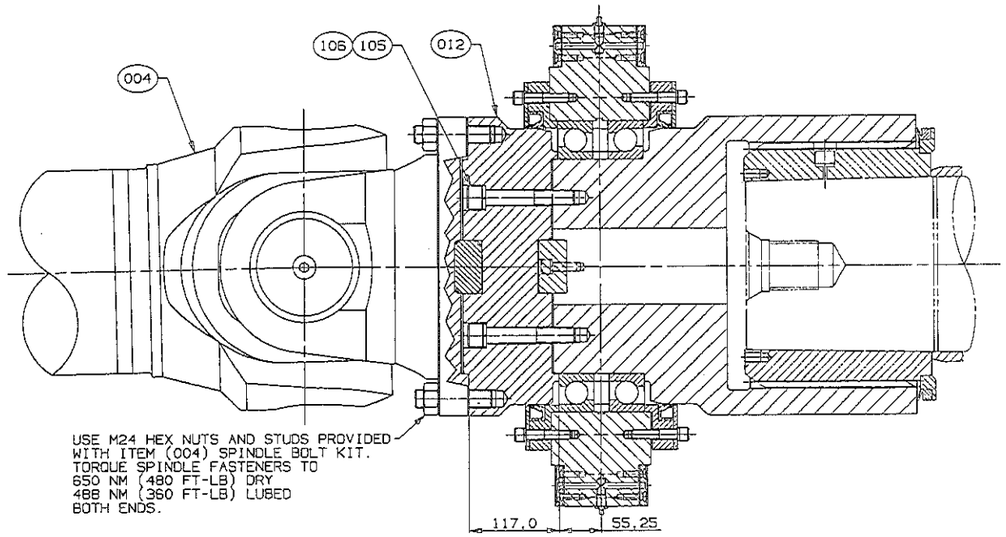

CARDAN Model ST SIZE U3390

Stands nº 7

AT THE MOMENT THERE IS NO DOCUMENTATION CARDAN STAND Nº 6

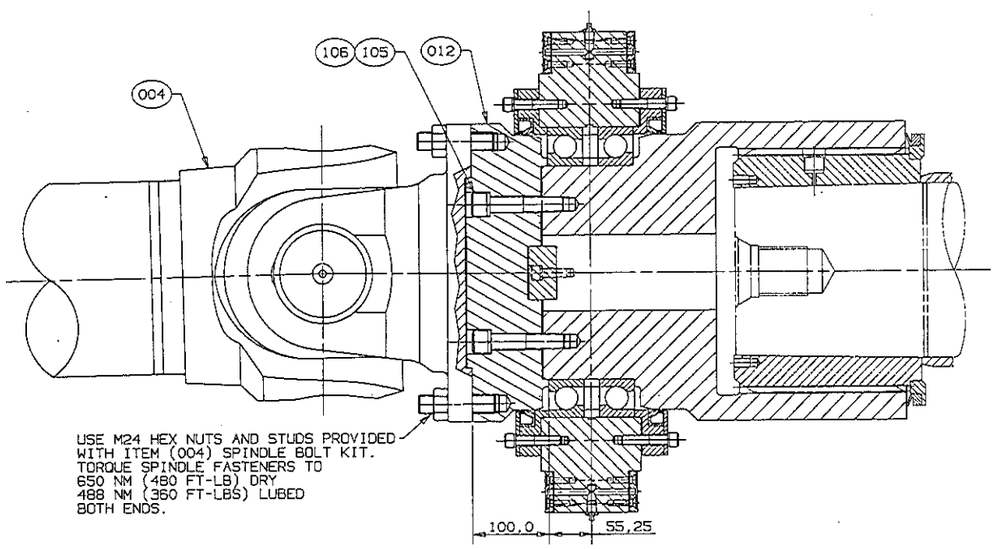

CARDAN Model ST SIZE U3350

Stands nº 8-9

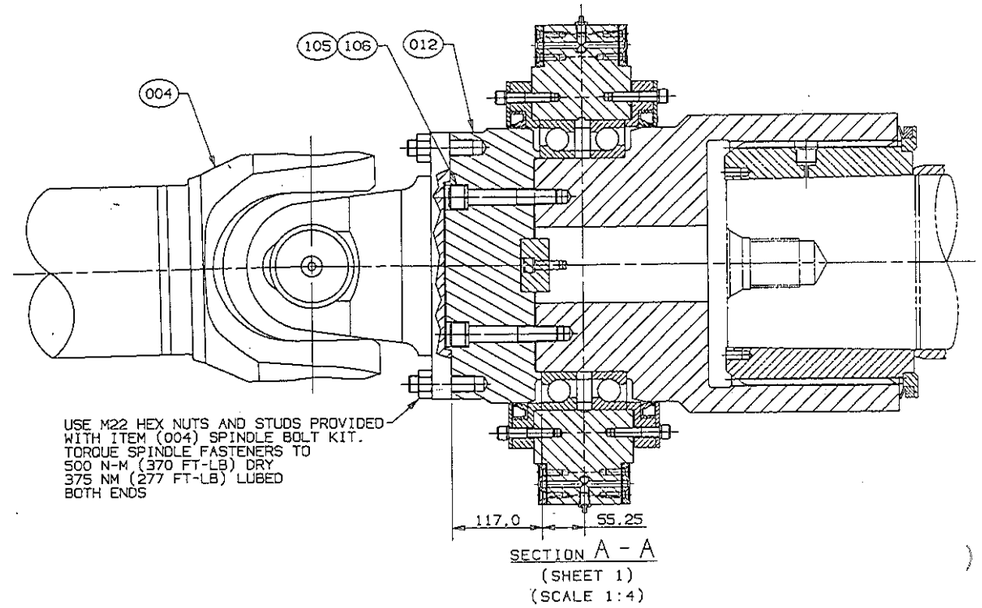

CARDAN Model ST SIZE 3315

Stands nº 10-11-12

SHEARS S12 L-A and S12 L-B

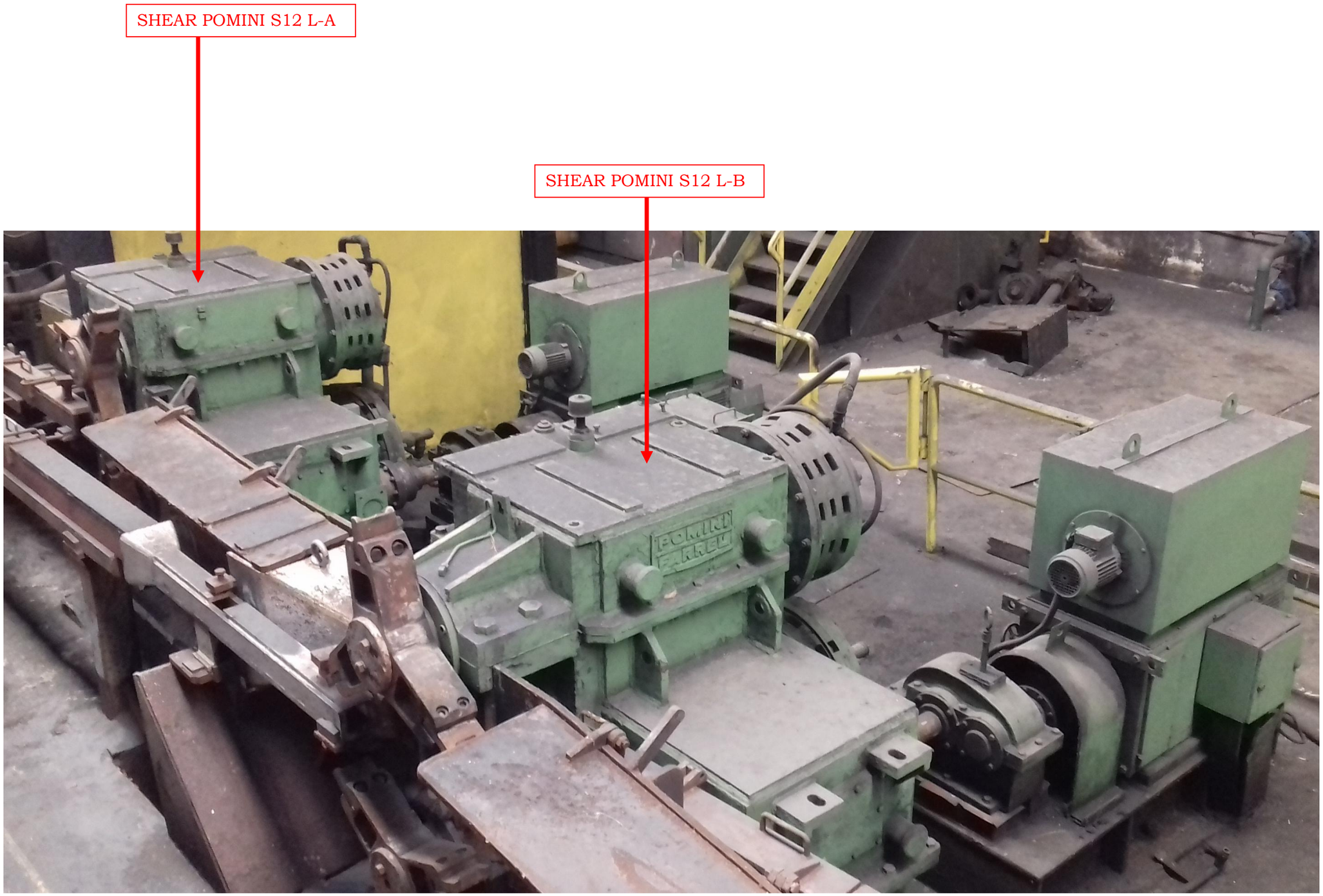

SHEAR S12 L-A

POMINI MACHINERY

Years of manufacturing 1983

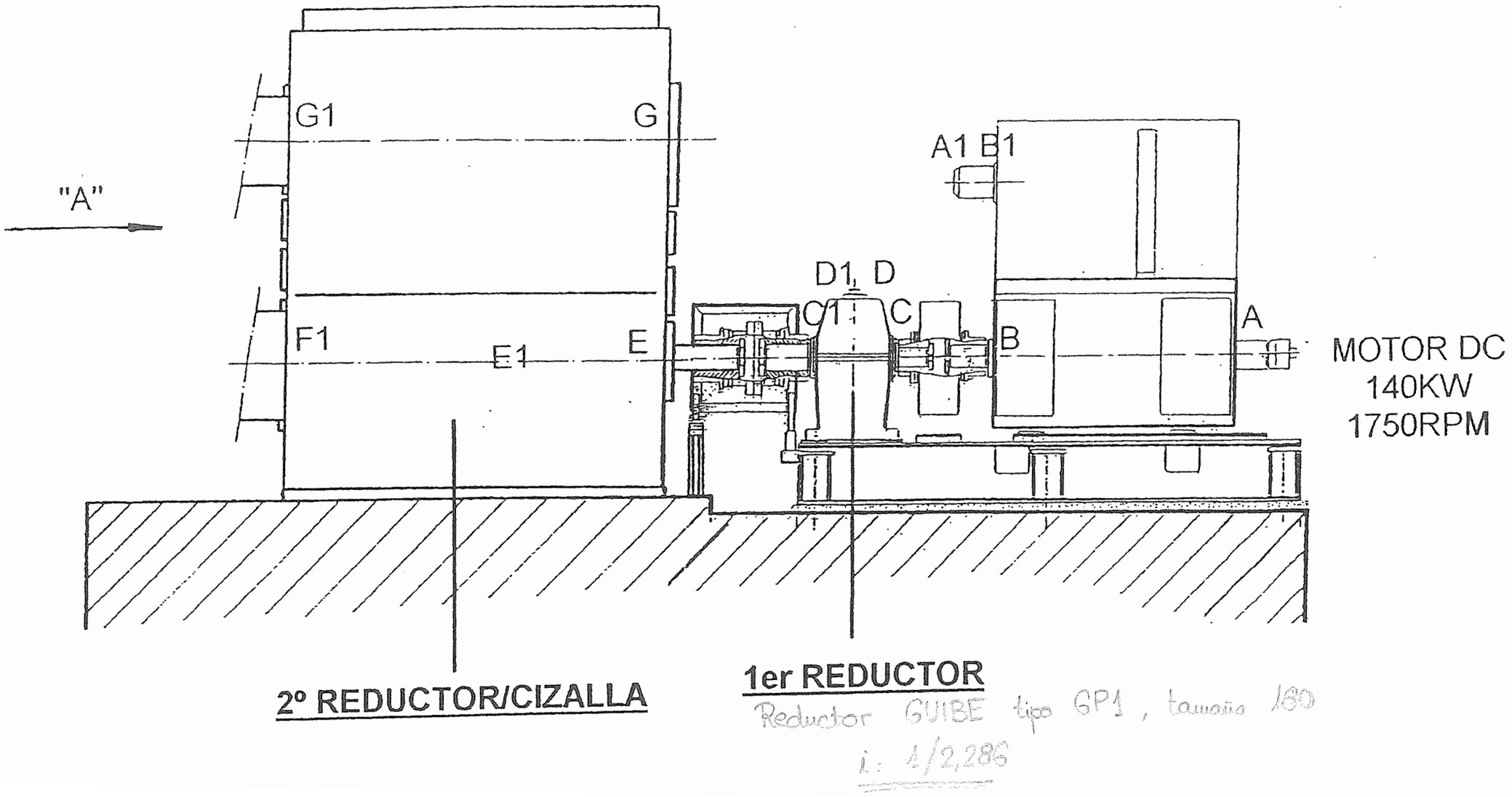

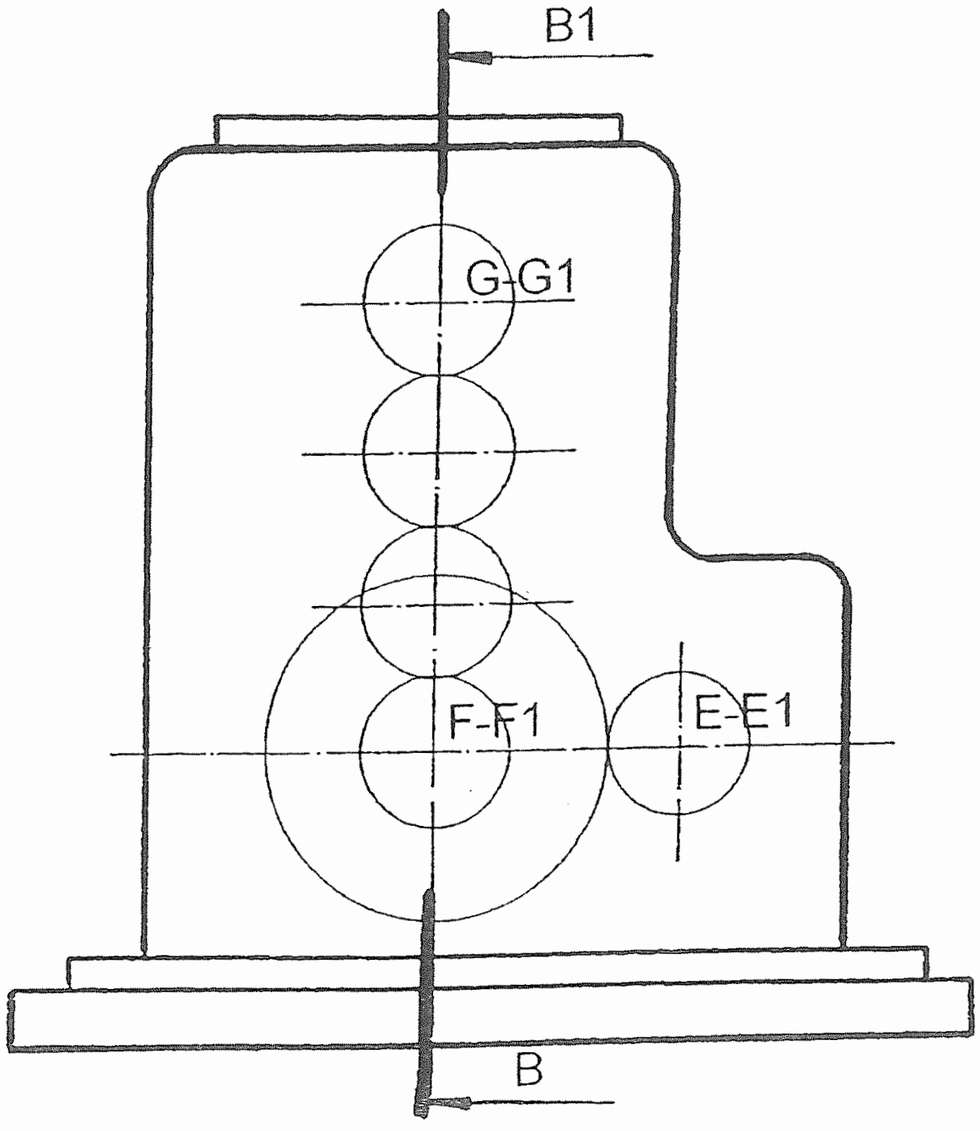
B1
G-G1
F-F1
E-E1
B

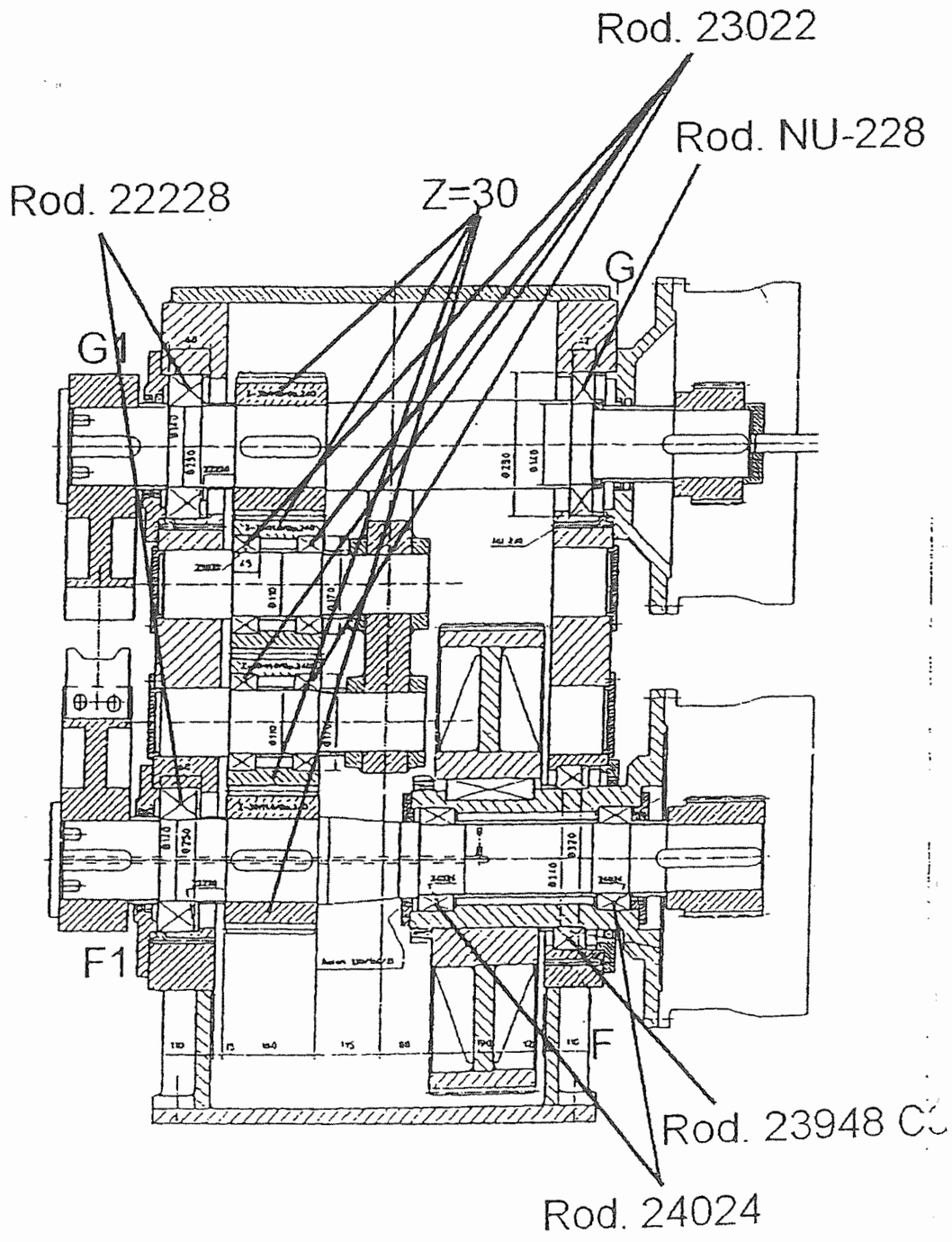
Rod. 23022
Rod. NU-228
Rod. 22228
Z=30
G
G1
F1
F
Rod. 23948 C
Rod. 24024

SHEAR S12 L-B

POMINI MACHINERY

Years of manufacturing 1983

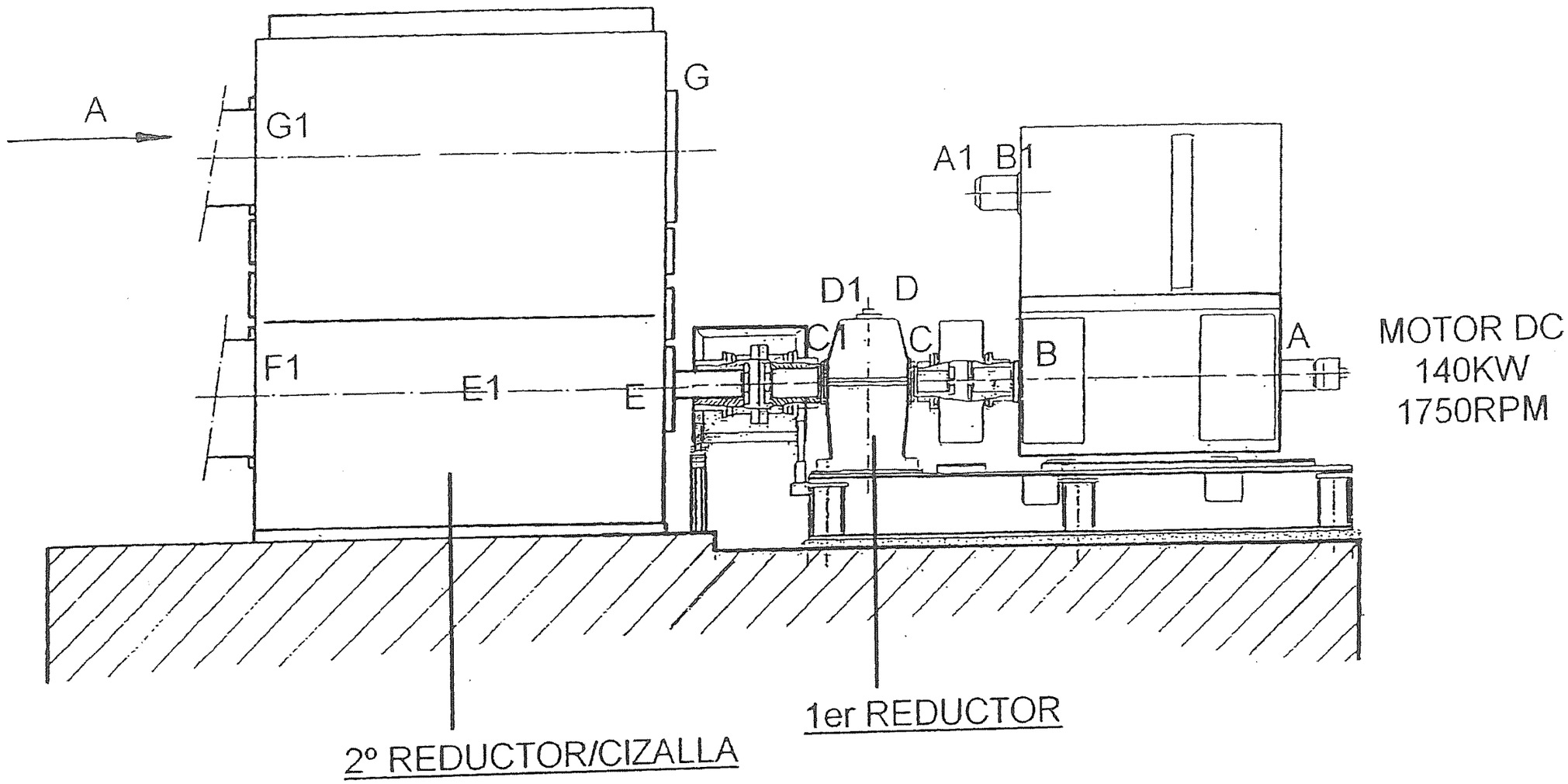

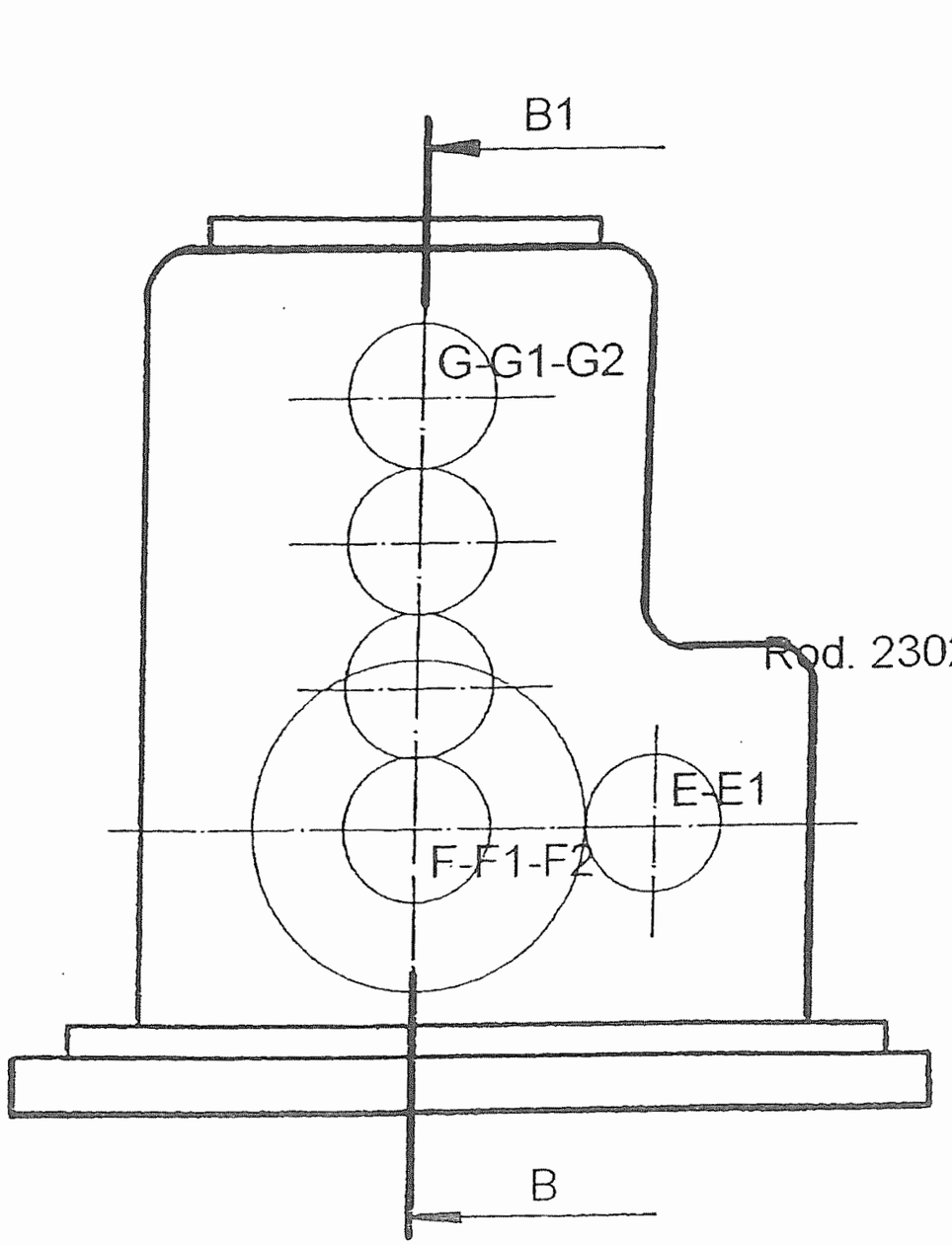
B1
G-G1-G2
E-E1
F-F1-F2
B

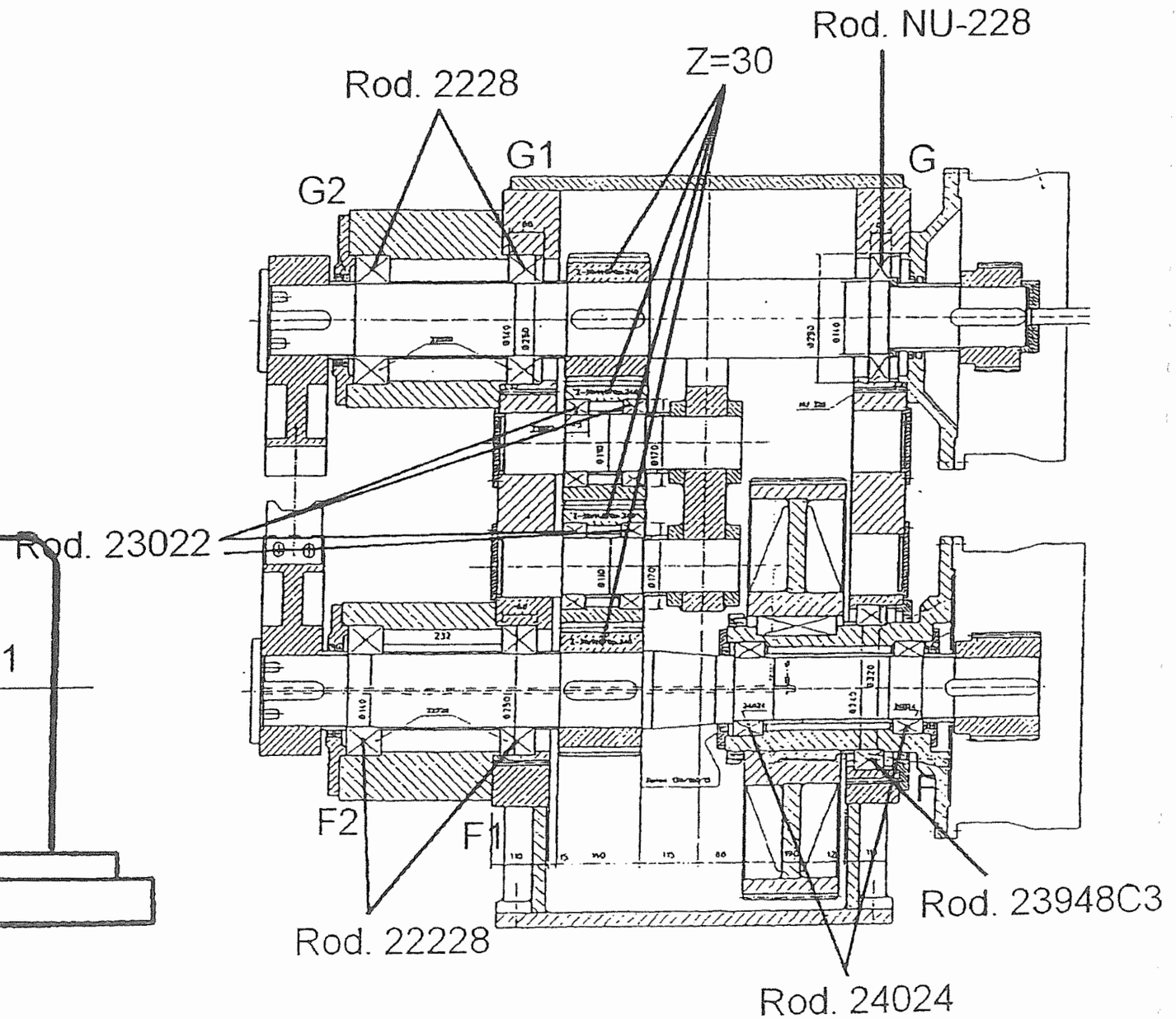
Rod. NU-228
Z=30
Rod. 2228
G1
G
G2
Rod. 23022
F2
F1
F
Rod. 23948C3
Rod. 22228
Rod. 24024

2º INTERMEDIATE STANDS LAGUN-ARTEA / MORGAN

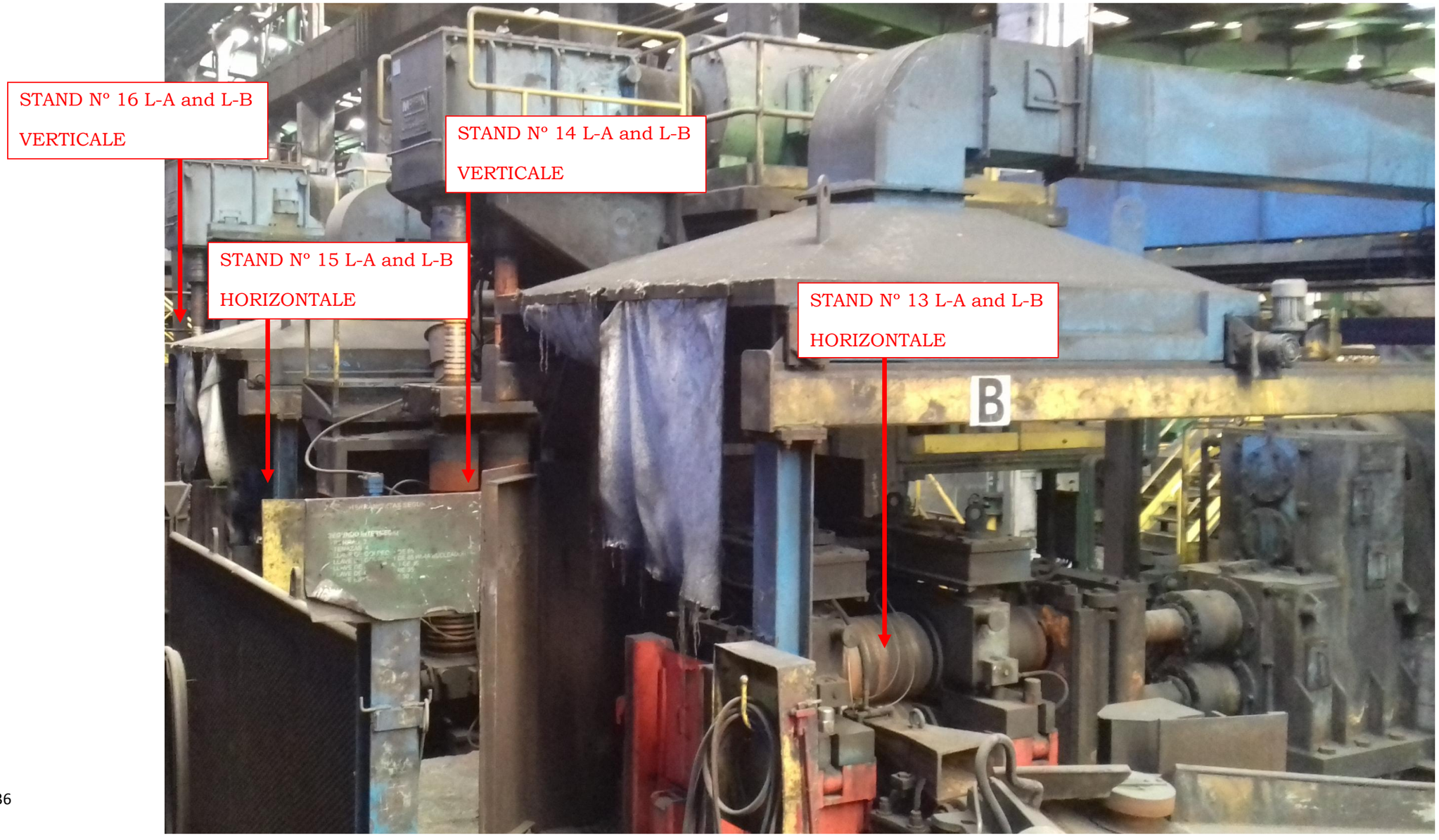

STAND N°13 L-A and L-B

LAGUN- ARTEA / MORGAN MACHINERY

Years of manufacturing 1993

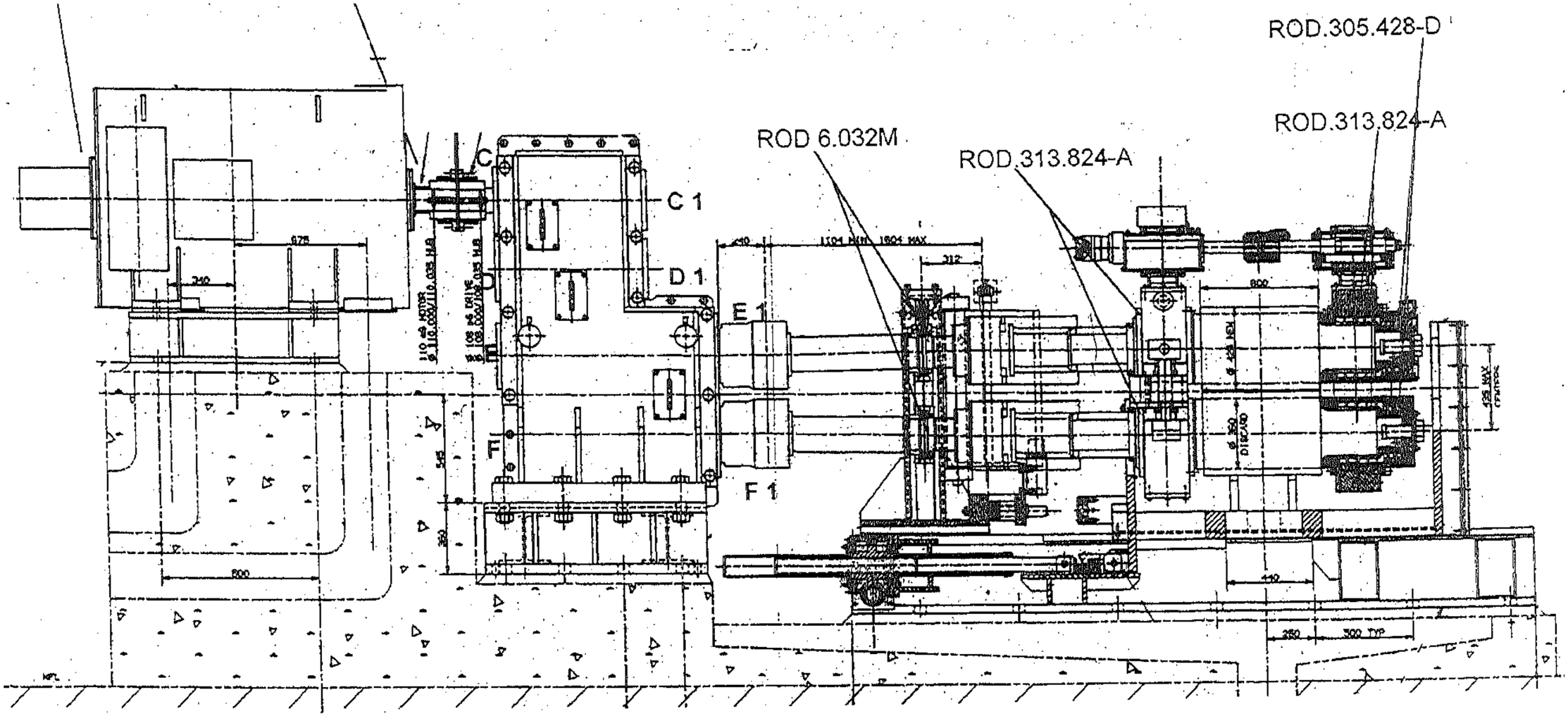

STAND N°14 L-A and L-B

LAGUN- ARTEA / MORGAN MACHINERY

Years of manufacturing 1993

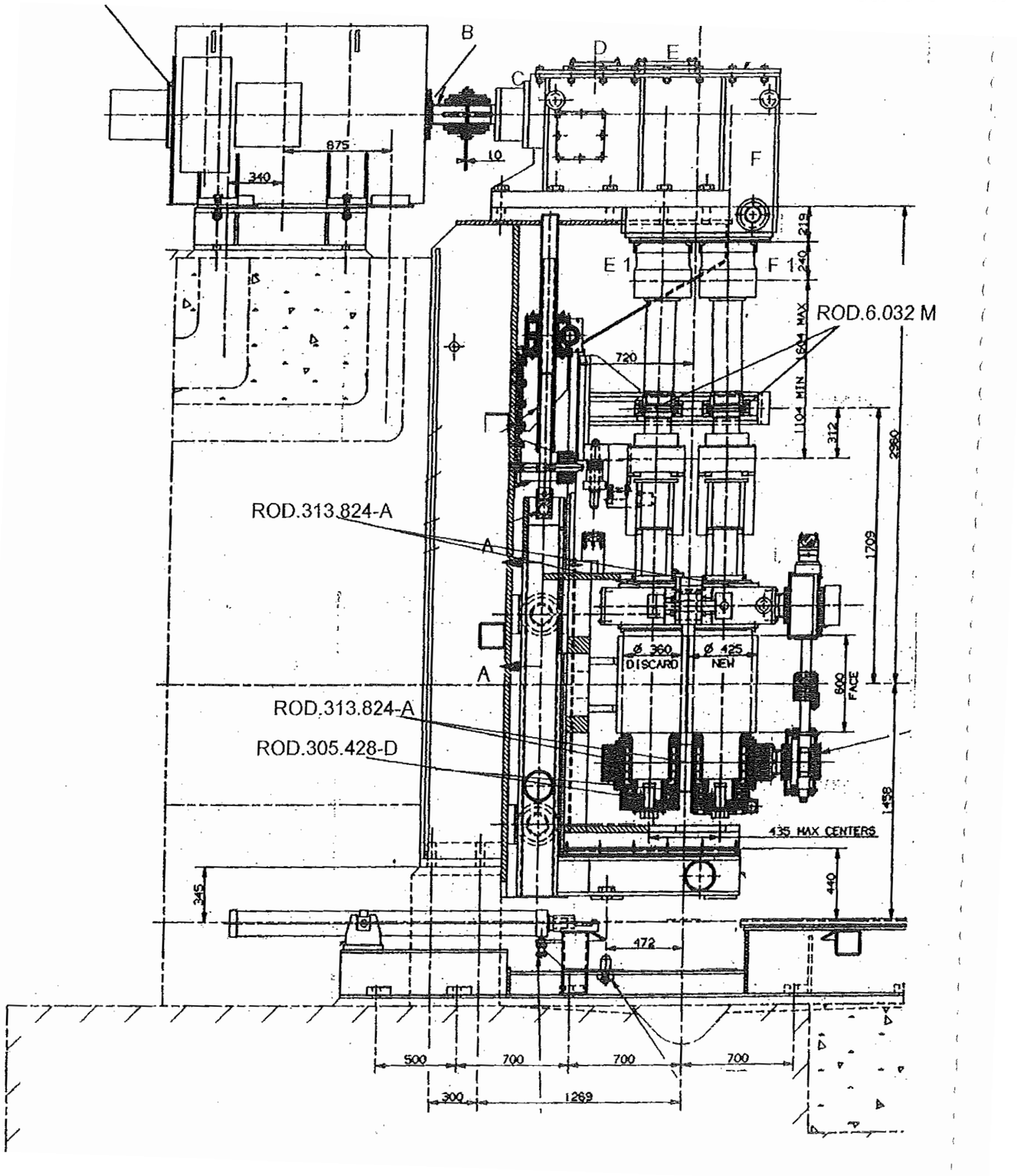

STAND N°15 L-A and L-B

LAGUN- ARTEA / MORGAN MACHINERY

Years of manufacturing 1993

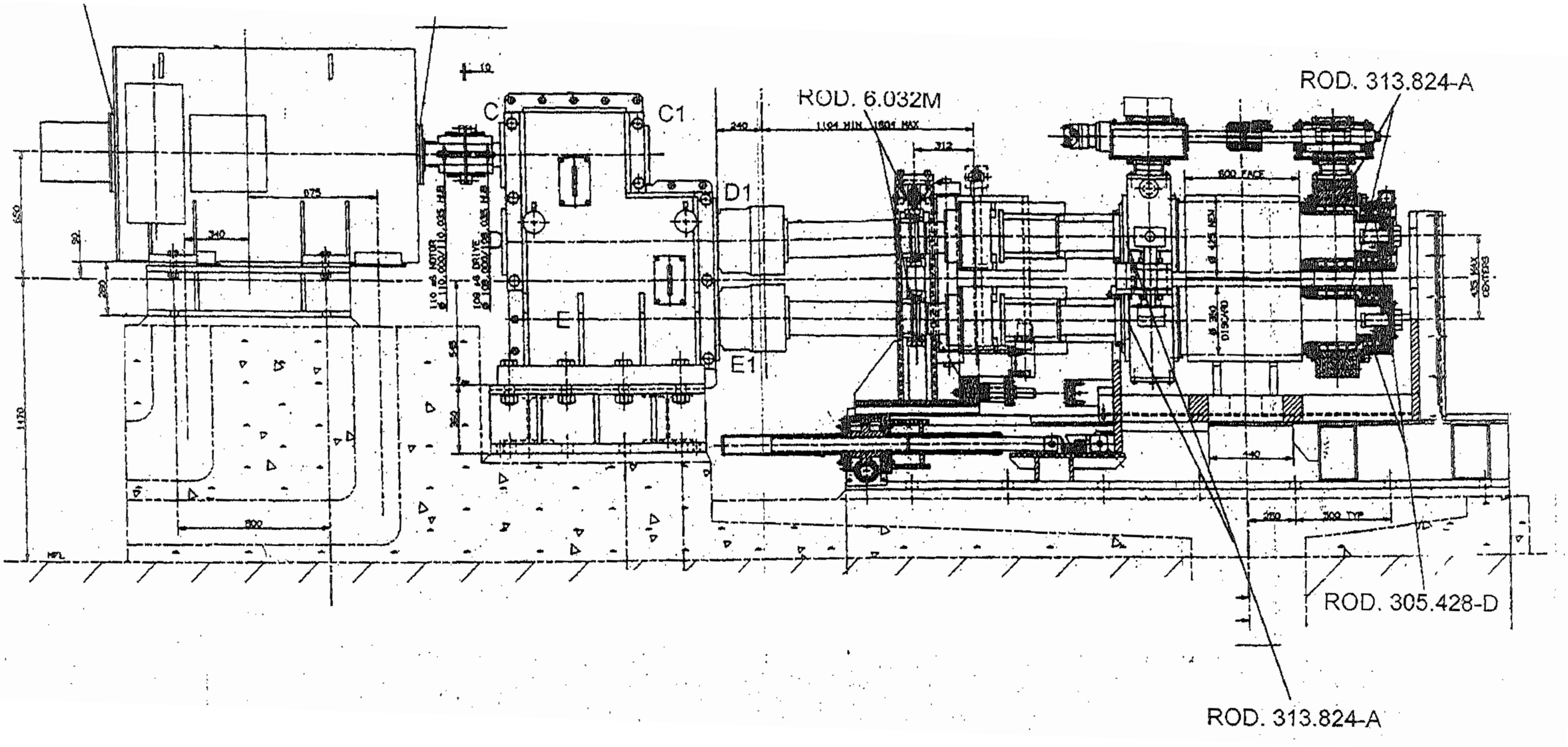

STAND N°16 L-A and L-B

LAGUN- ARTEA / MORGAN MACHINERY

Years of manufacturing 1993

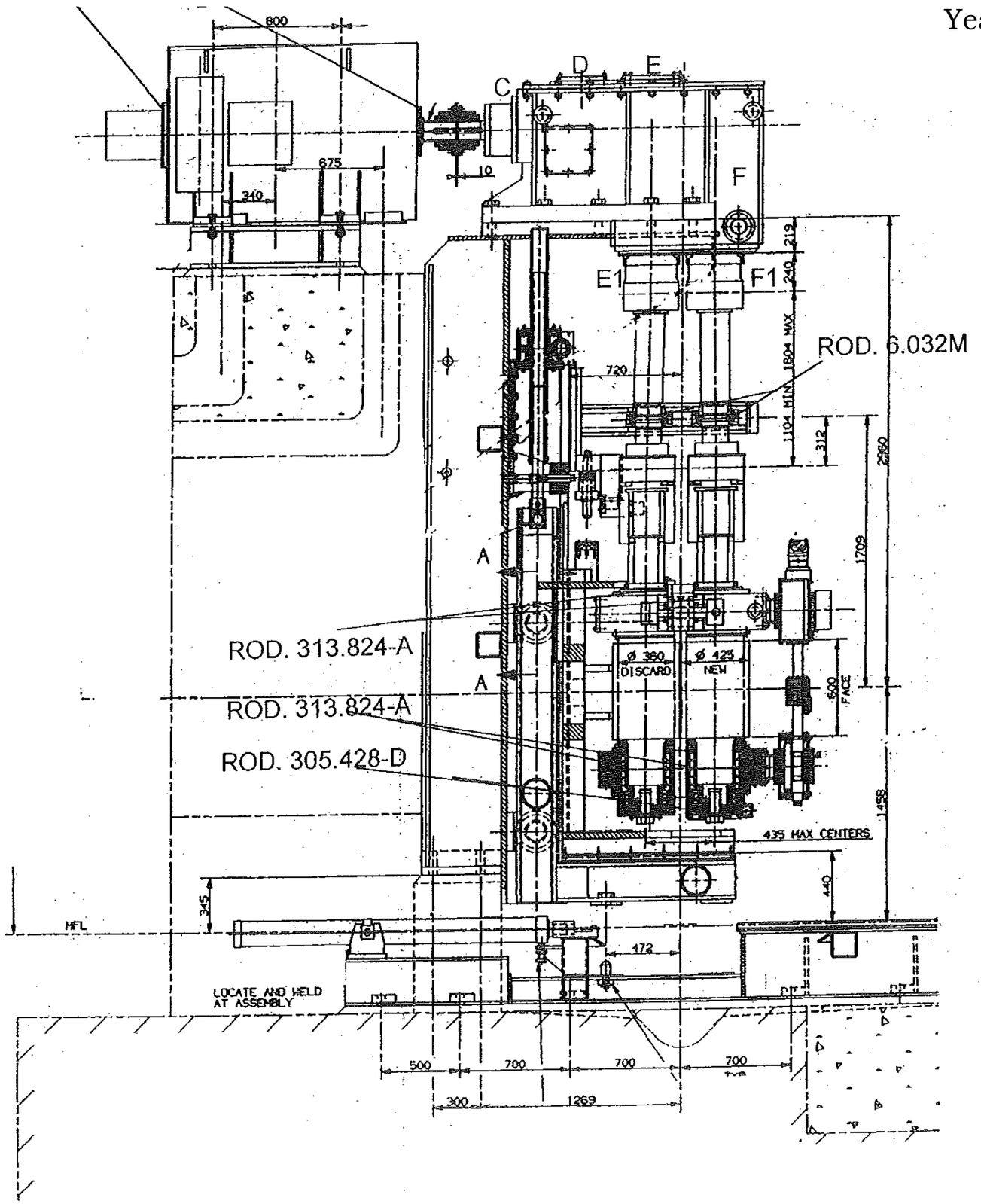

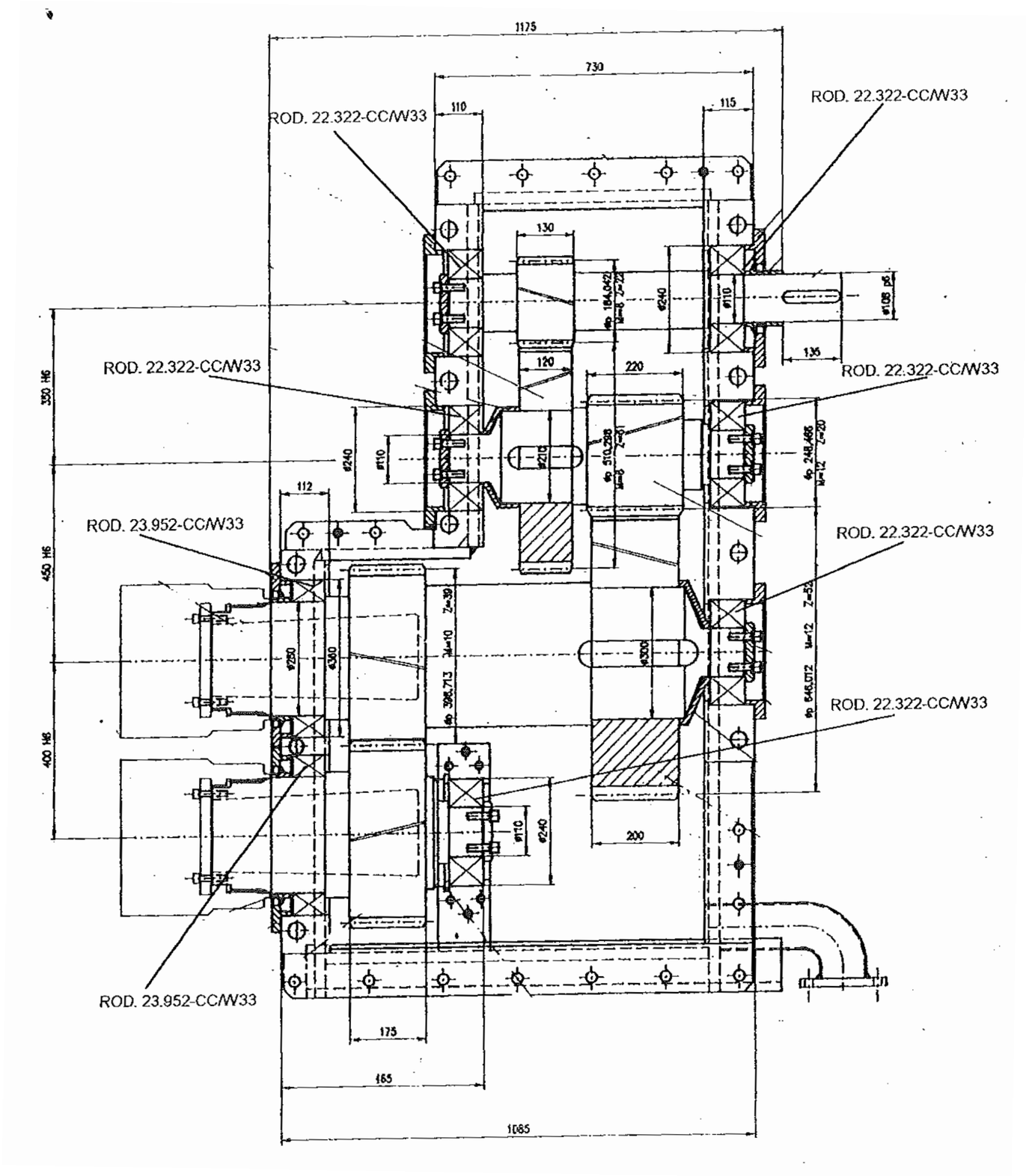
ROD. 22.322-CC/W33
ROD. 22.322-CC/W33
ROD. 22.322-CC/W33
ROD. 22.322-CC/W33
ROD. 22.322-CC/W33
ROD. 22.322-CC/W33
ROD. 23.952-CC/W33
ROD. 23.952-CC/W33
1175
730
110
115
130
120
220
135
112
200
175
165
1085
330 H6
450 H6
400 H6

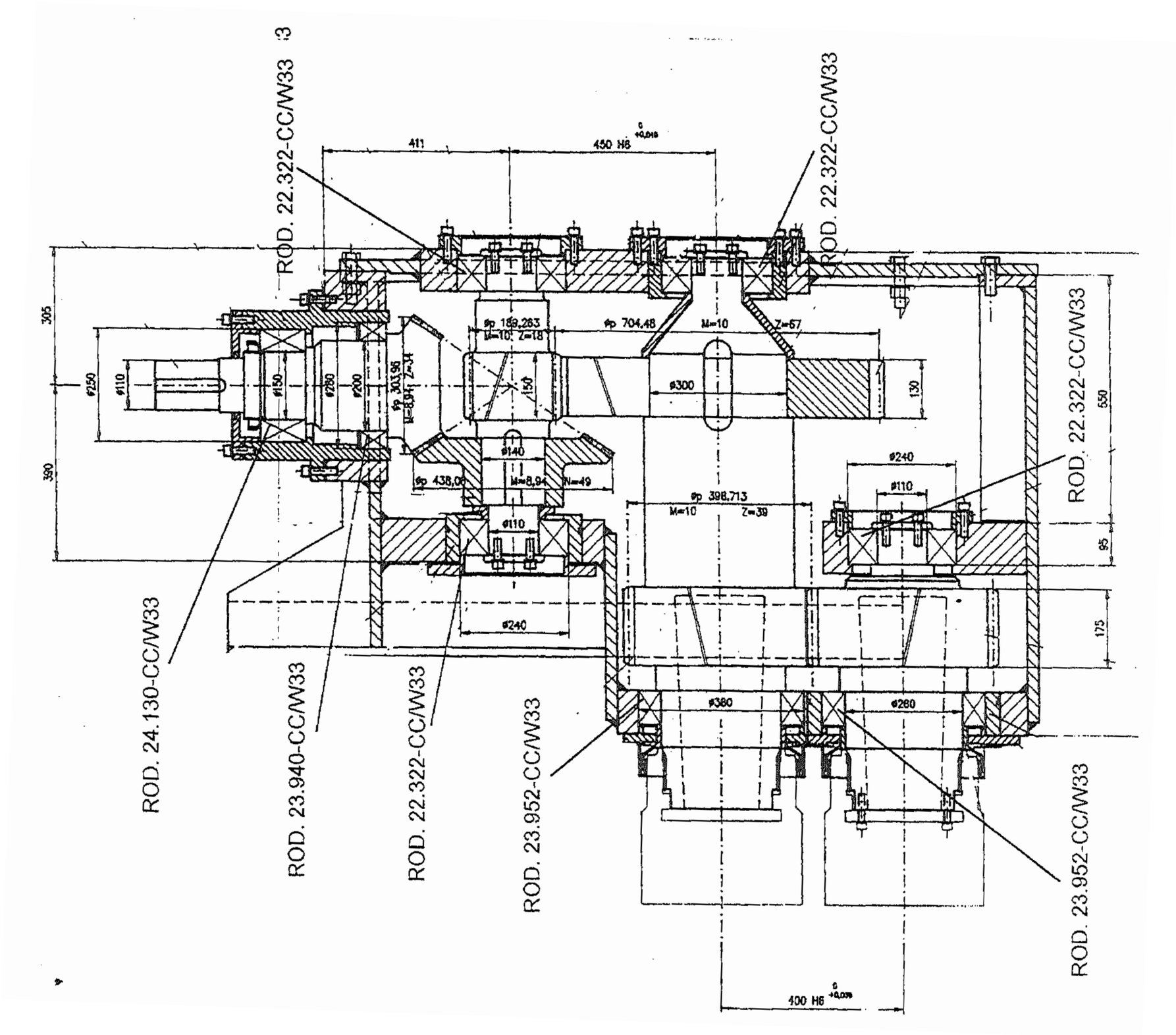
ROD. 22.322-CC/W33
ROD. 22.322-CC/W33
ROD. 22.322-CC/W33
ROD. 24.130-CC/W33
ROD. 23.940-CC/W33
ROD. 22.322-CC/W33
ROD. 23.952-CC/W33
ROD. 23.952-CC/W33
411
450 H6
400 H6
305
390
ø250
ø110
ø150
ø280
ø200
ø140
ø300
ø240
ø380
130
550
95
175
φp 188,283
M=10 Z=18
φp 704,48
M=10
Z=67
φp 303,96
M=8,94 Z=34
φp 438,06
M=8,94
N=49
φp 398,713
M=10
Z=39

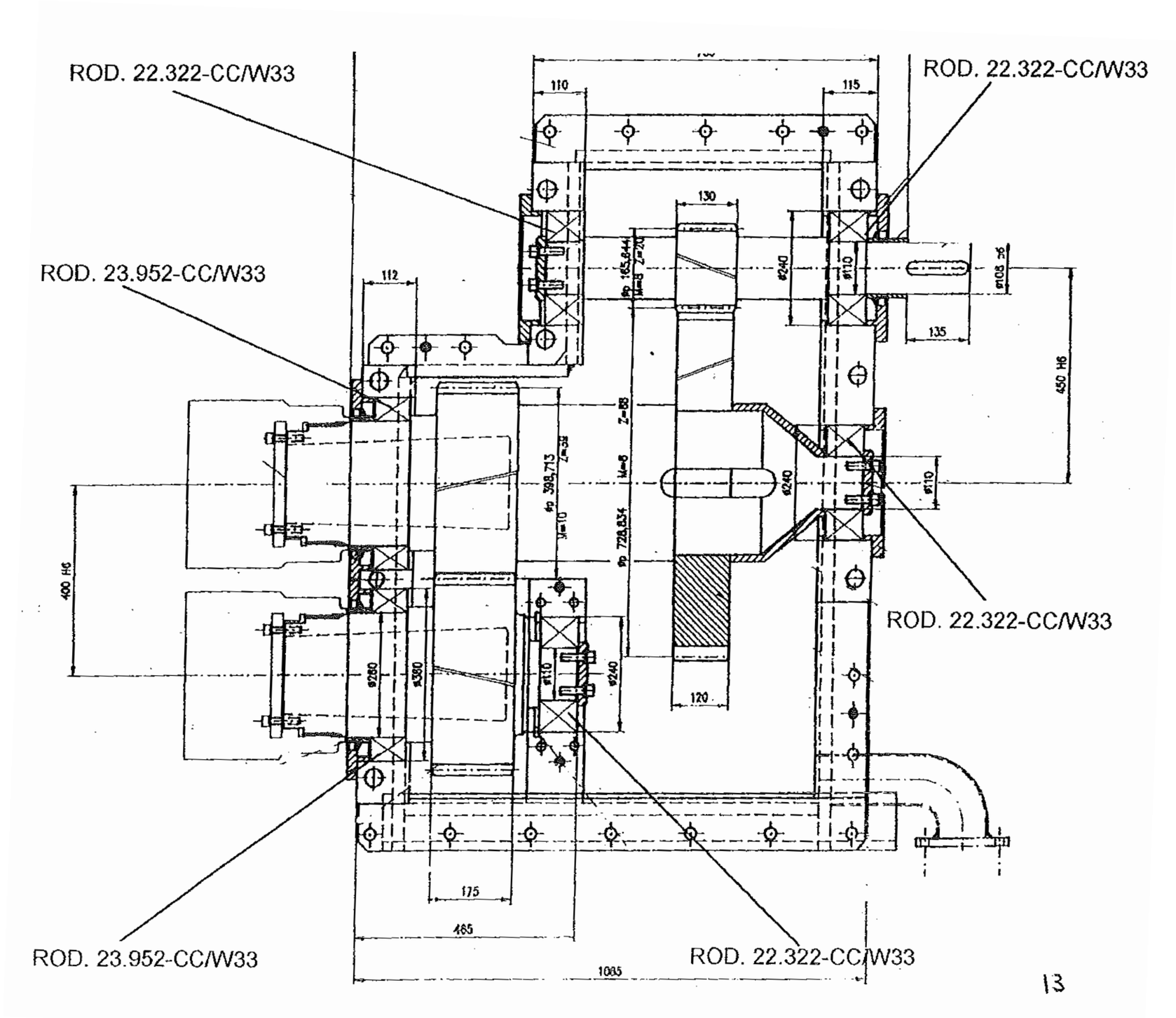
ROD. 22.322-CC/W33
ROD. 22.322-CC/W33
ROD. 23.952-CC/W33
ROD. 22.322-CC/W33
ROD. 23.952-CC/W33
ROD. 22.322-CC/W33
110
115
130
112
135
450 H6
400 H6
120
175
465
1085
13

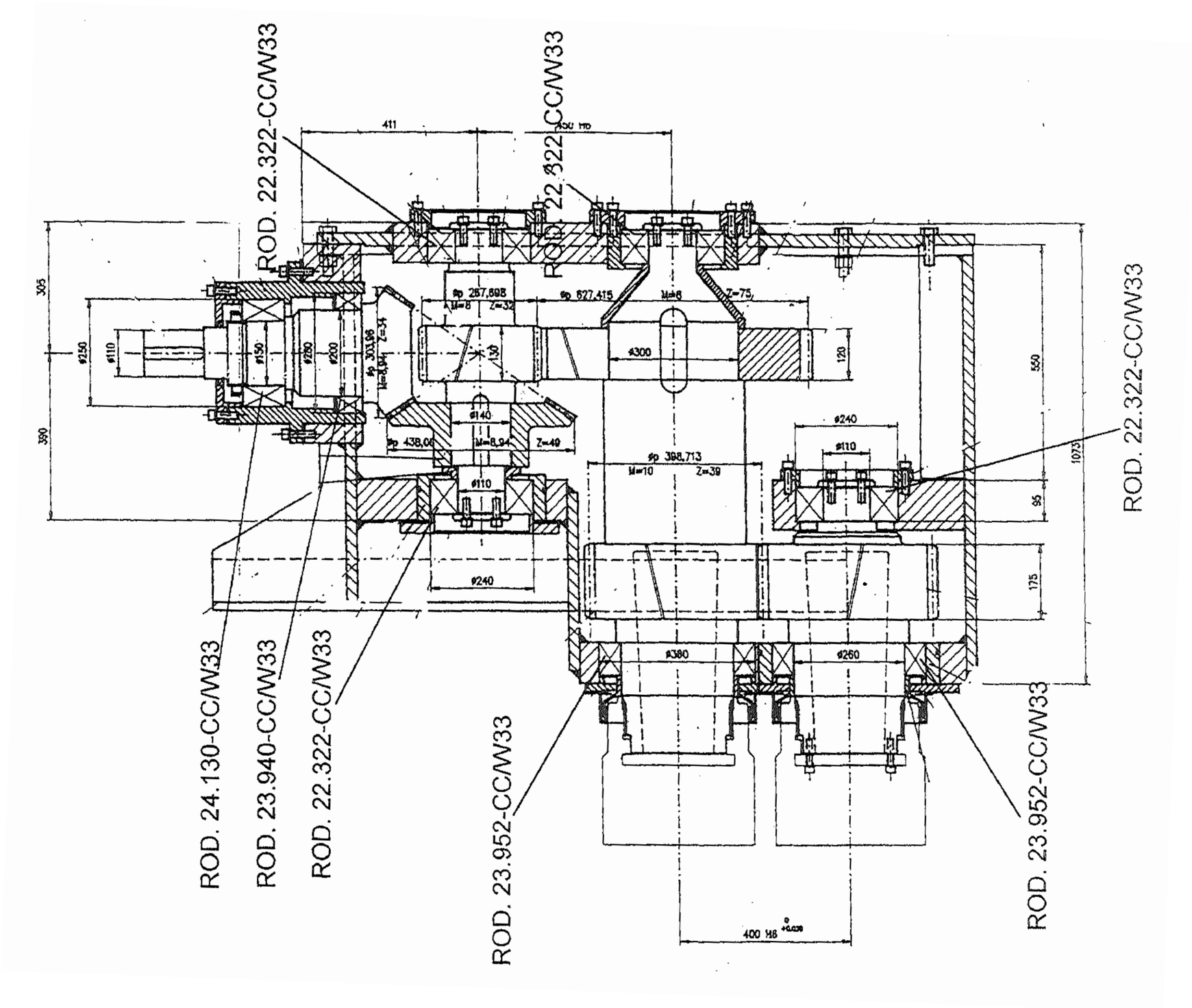
ROD. 22.322-CC/W33
ROD. 22.322-CC/W33
ROD. 22.322-CC/W33
ROD. 24.130-CC/W33
ROD. 23.940-CC/W33
ROD. 22.322-CC/W33
ROD. 23.952-CC/W33
ROD. 23.952-CC/W33
411
305
390
ø250
ø110
ø150
ø200
ø300
ø140
ø240
ø380
ø260
120
550
1073
95
175
130
Z=32
Z=75
Z=49
Z=39
M=10
400 h8

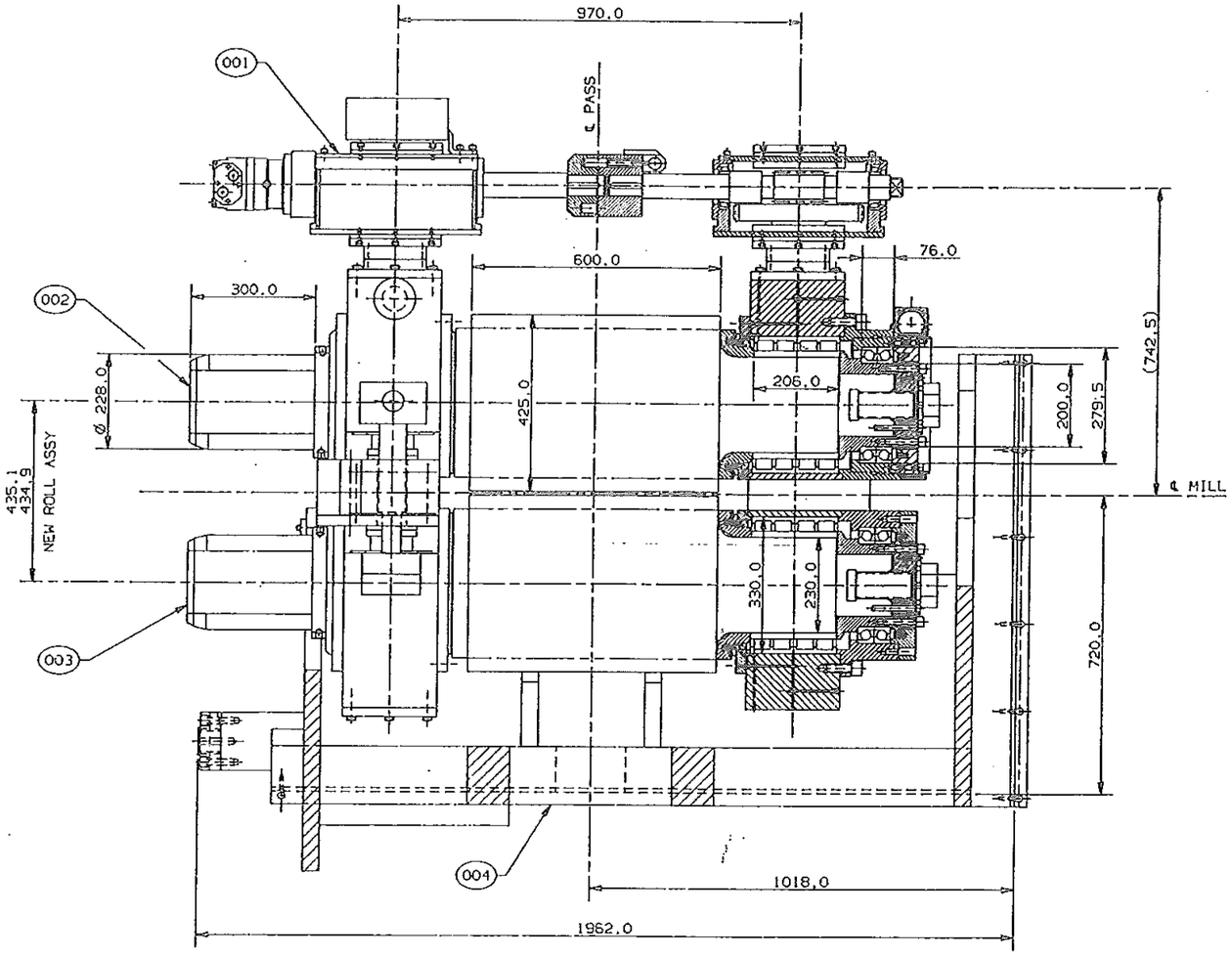
970.0
001
℄ PASS
600.0
76.0
002
300.0
Ø 228.0
425.0
206.0
200.0
279.5
(742.5)
℄ MILL
435.1
434.9
NEW ROLL ASSY
330.0
230.0
720.0
003
004
1018.0
1962.0

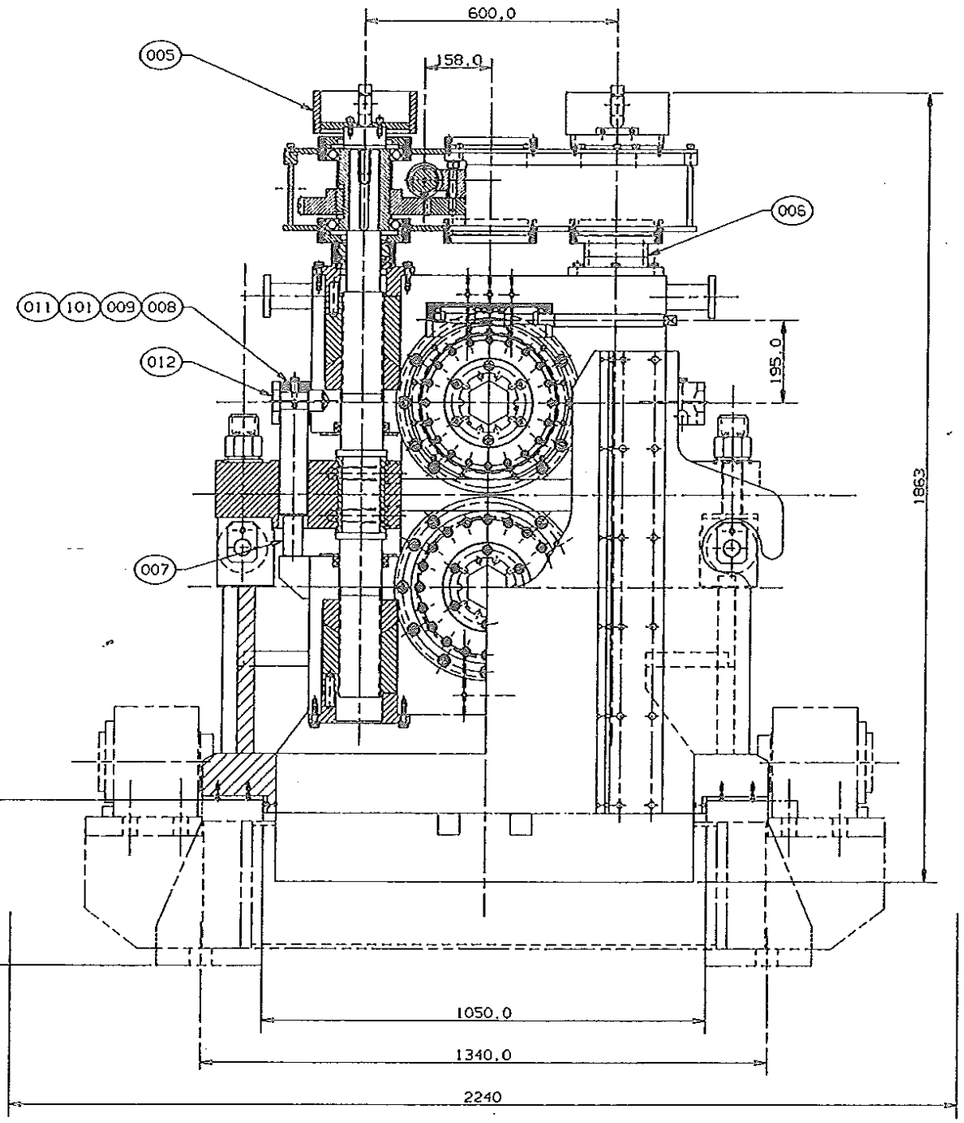
600.0
158.0
005
006
011
101
009
008
012
195.0
1863
007
390.0
1050.0
1340.0
2240

MILL SPINDLE JAURE Model ALS-350-T

STAND N°13-14-15-16 L-A and L-B

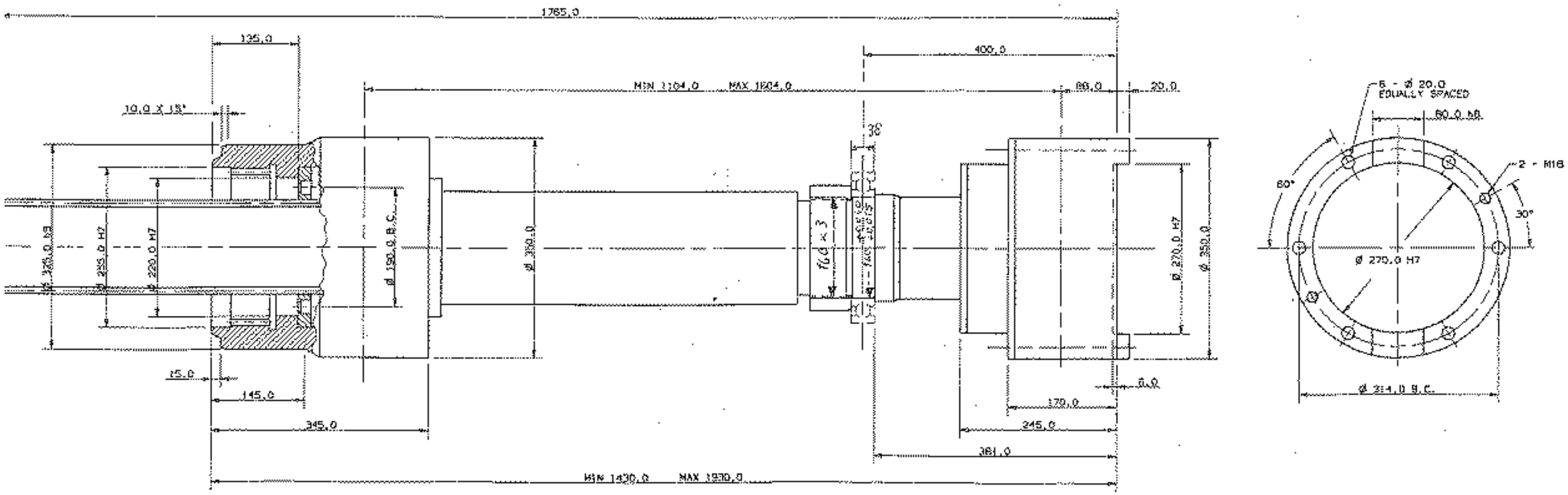

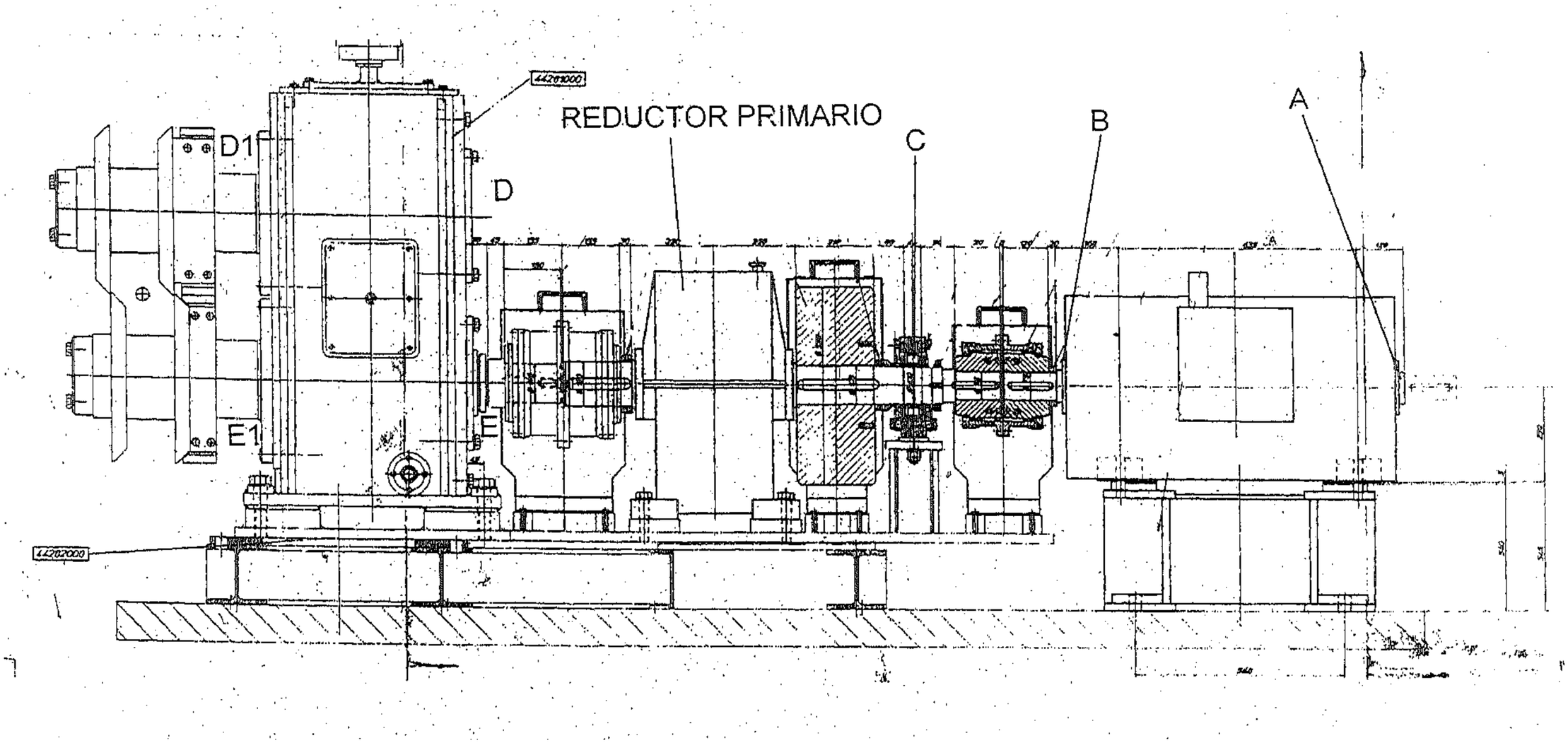
REDUCTOR PRIMARIO
A
B
C
D
D1
E
E1

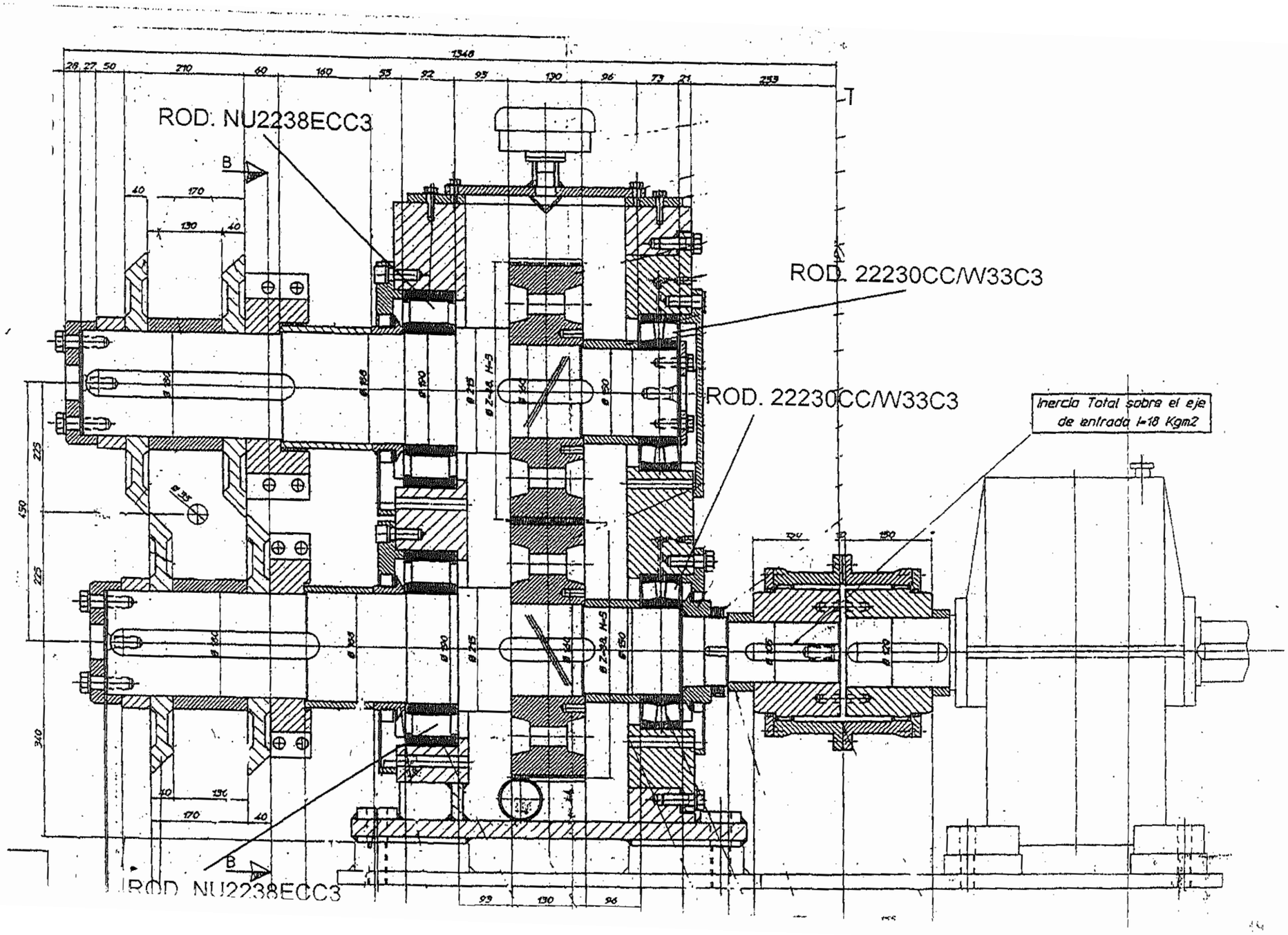
ROD. NU2238ECC3
ROD. 22230CC/W33C3
ROD. 22230CC/W33C3
Inercia Total sobre el eje de entrada I=18 Kgm2
ROD. NU2238ECC3

MONOBLOCK 10 STANDS DEMAG

DEMAG MACHINERY

Years of manufacturing 1977

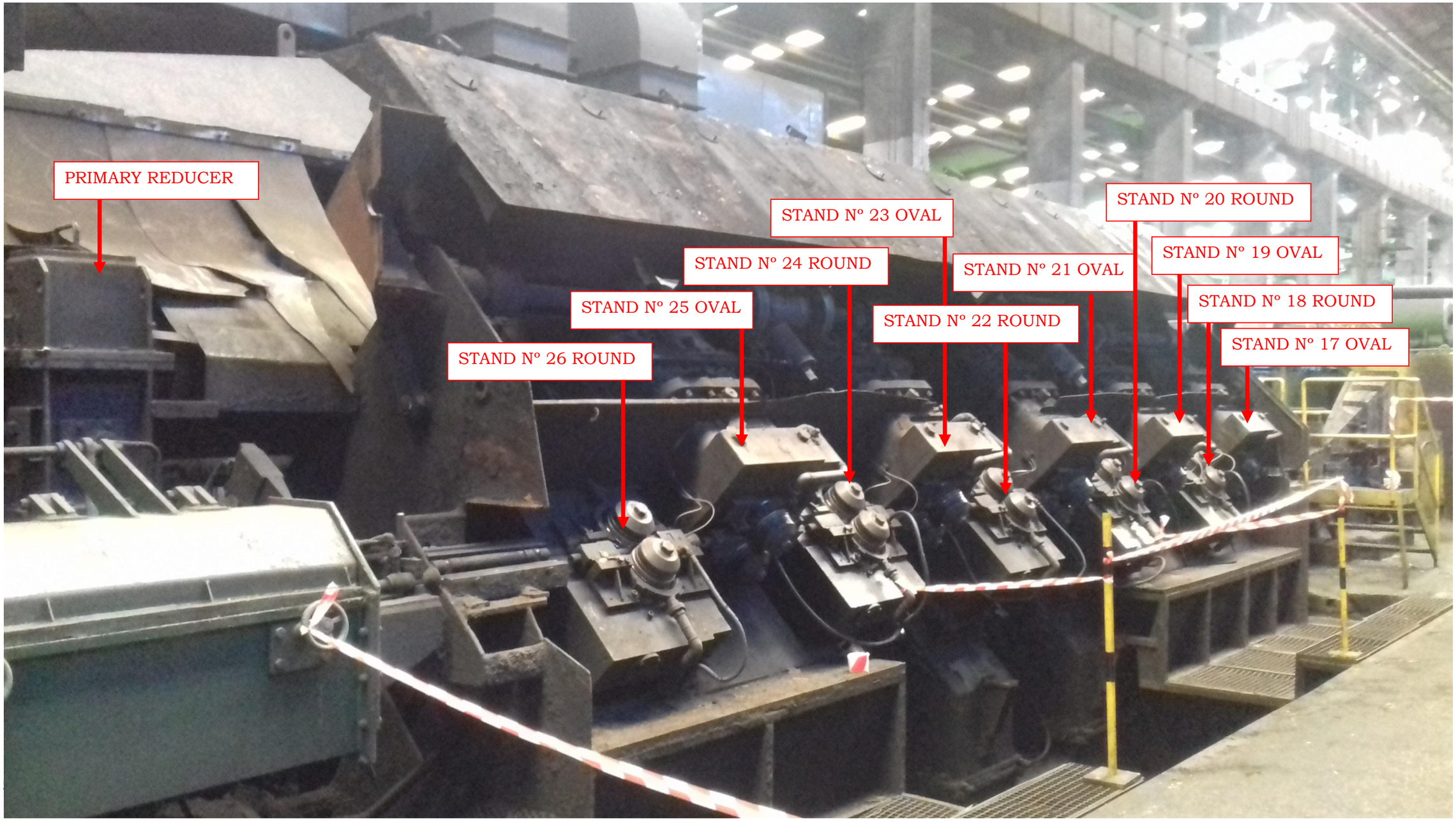

GENERAL PLANE MONOBLOCK DEMAG

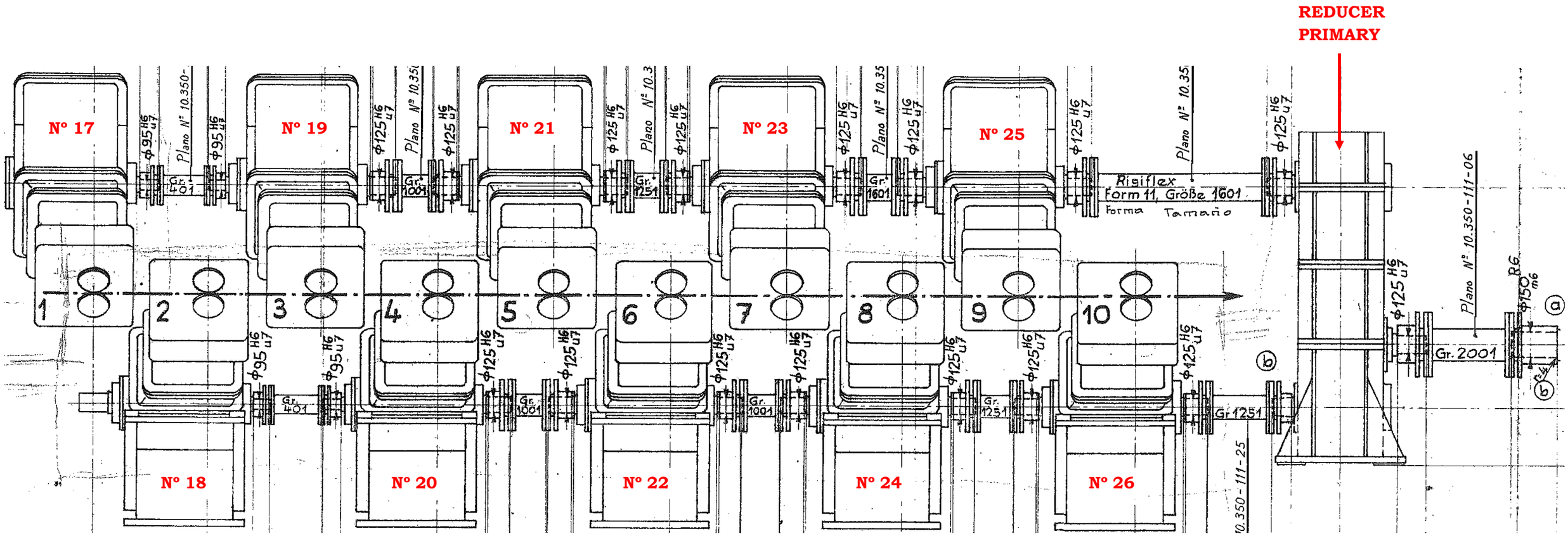

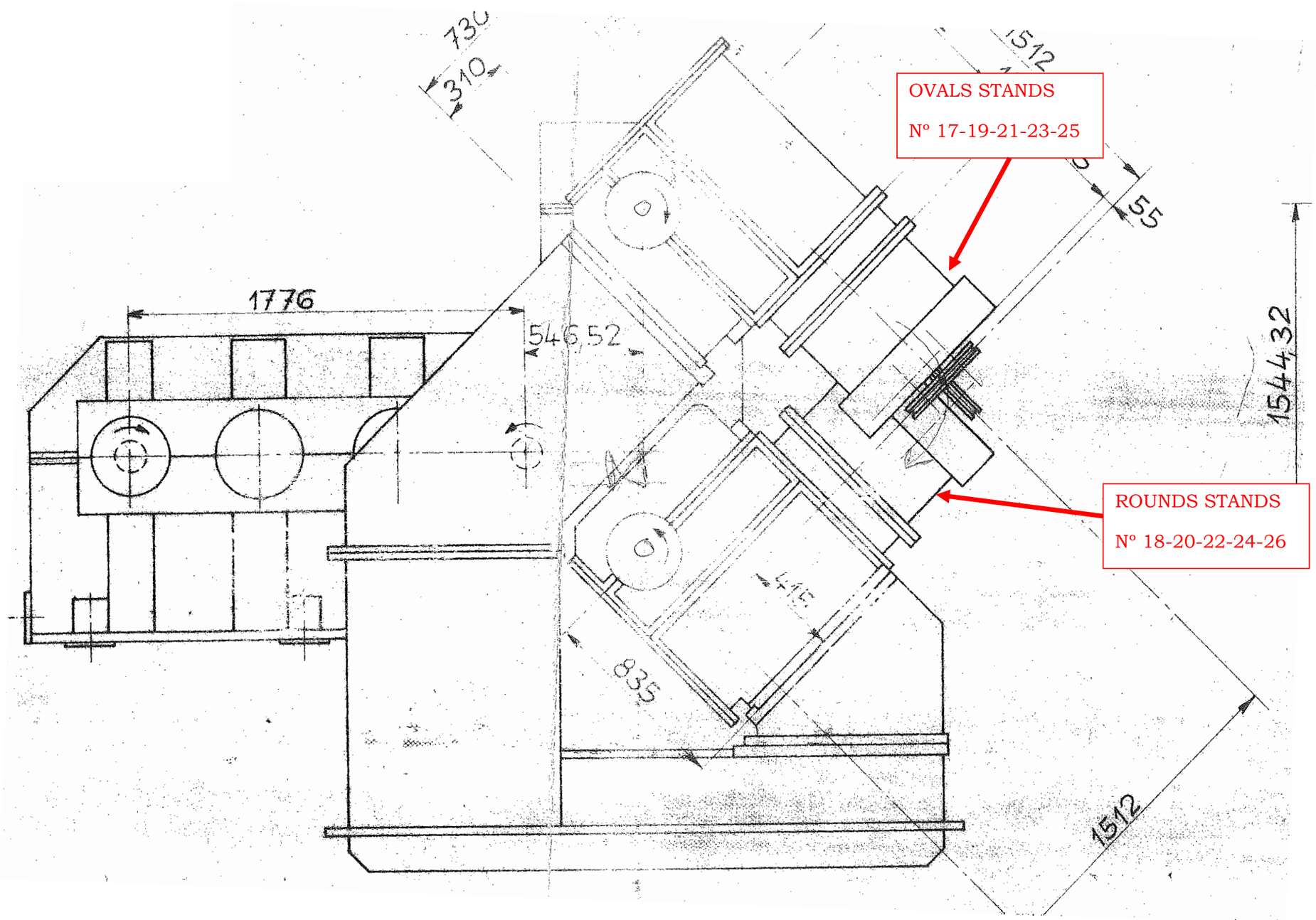
730
310
1512
OVALS STANDS
Nº 17-19-21-23-25
55
1776
546,52
1544,32
ROUNDS STANDS
Nº 18-20-22-24-26
415
835
1512

STAND MONOBLOC DEMAG

Nº 17-18-19-20-21-22-23-24-25 L-A and L-B

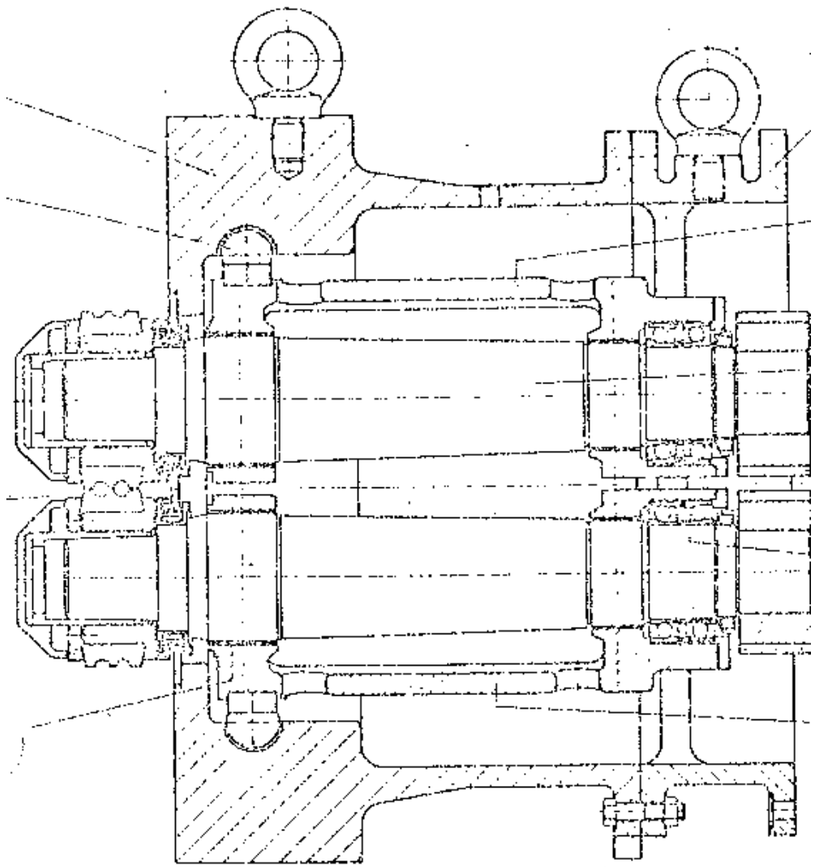

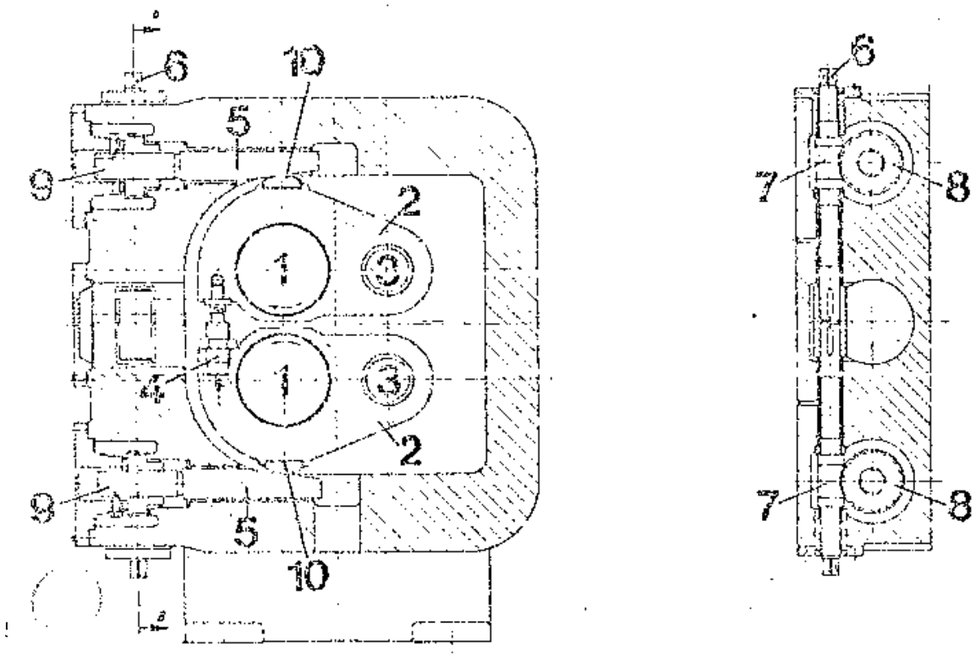

GEAR BOX

STAND MONOBLOC DEMAG

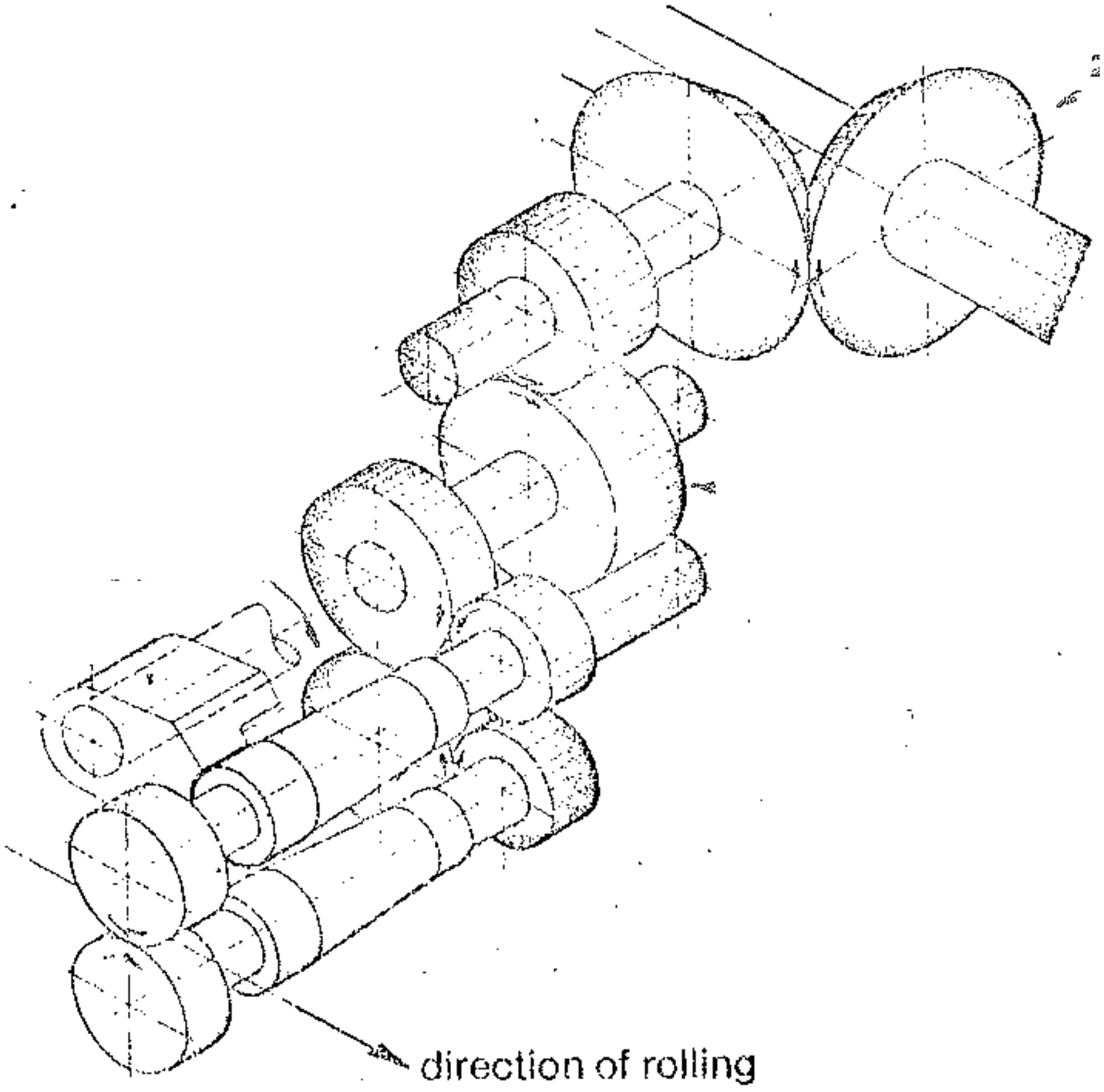

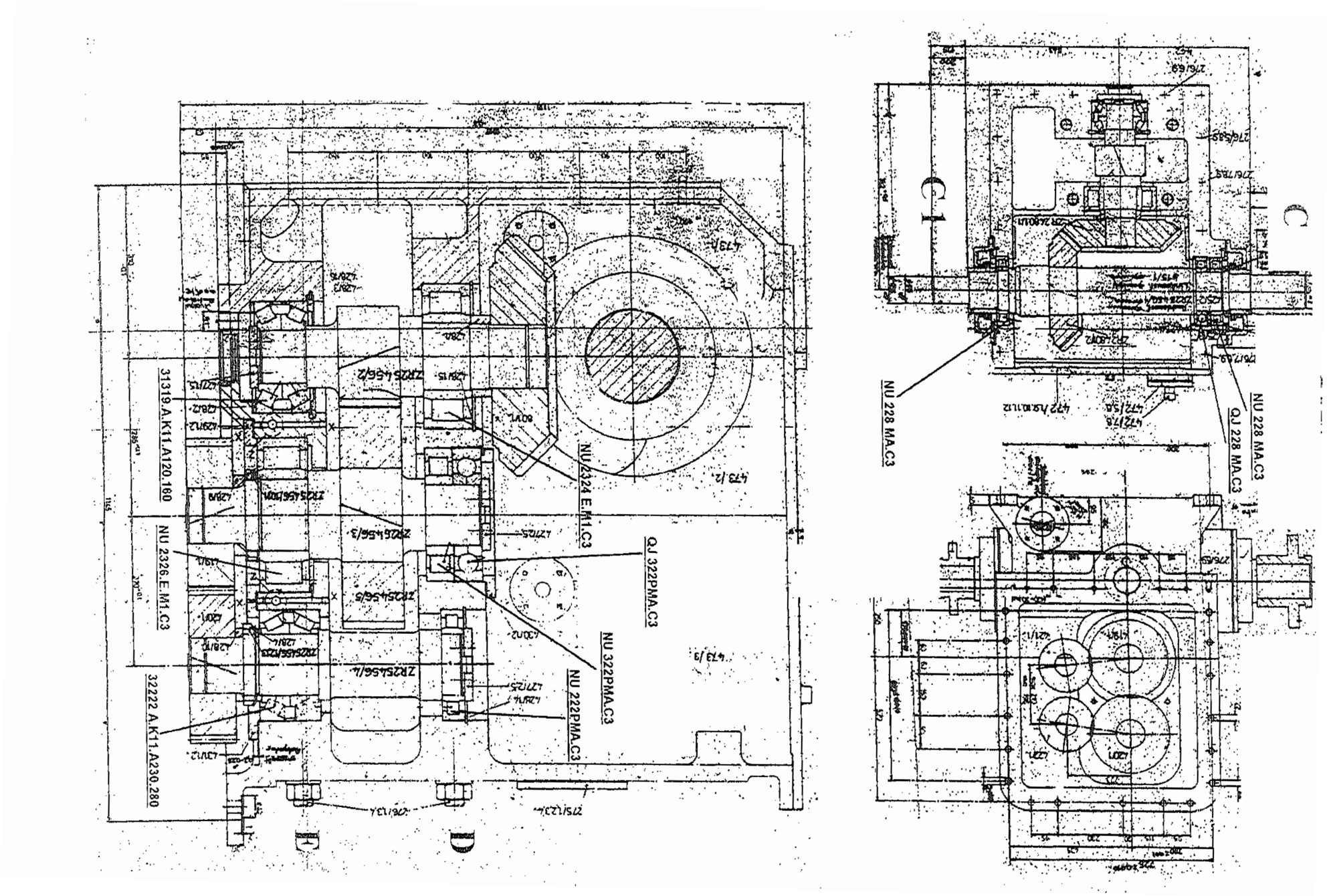
31319.A.K11.A120.160
NU 2326.E.M1.C3
32222 A.K11.A230.280
NU2324 E.M1.C3
Q.J 322PMA.C3
NU 322PMA.C3
NU 222PMA.C3
NU 228 MA.C3
Q.J 228 MA.C3
NU 228 MA.C3

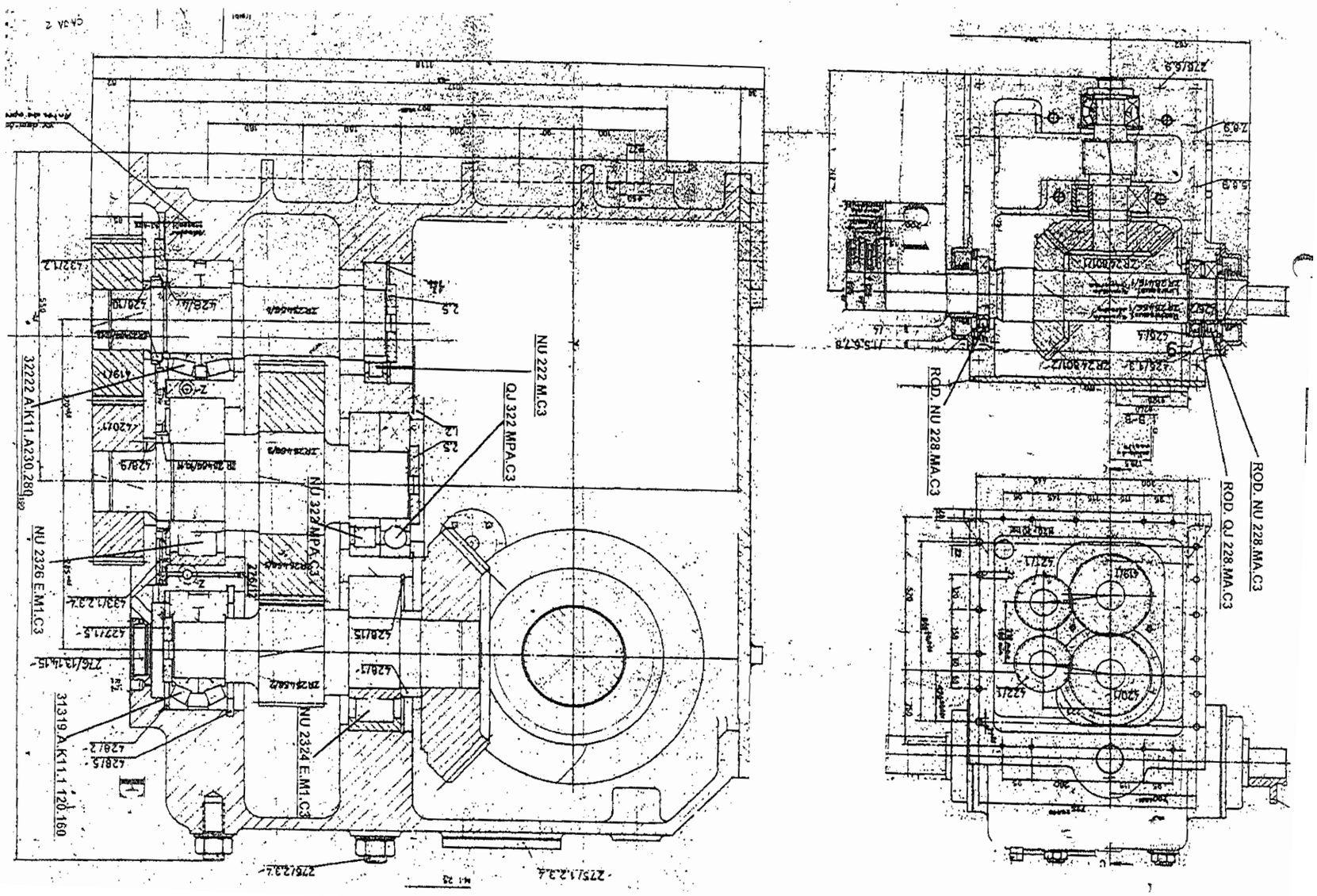
32222 A.K11.A230.280
NU 2326 E.M1.C3
31319 A.K11.1 120.160
NU 322 MPA.C3
NU 2324 E.M1.C3
QJ 322 MPA.C3
NU 222 M.C3
ROD. NU 228.MA.C3
ROD. QJ 228.MA.C3

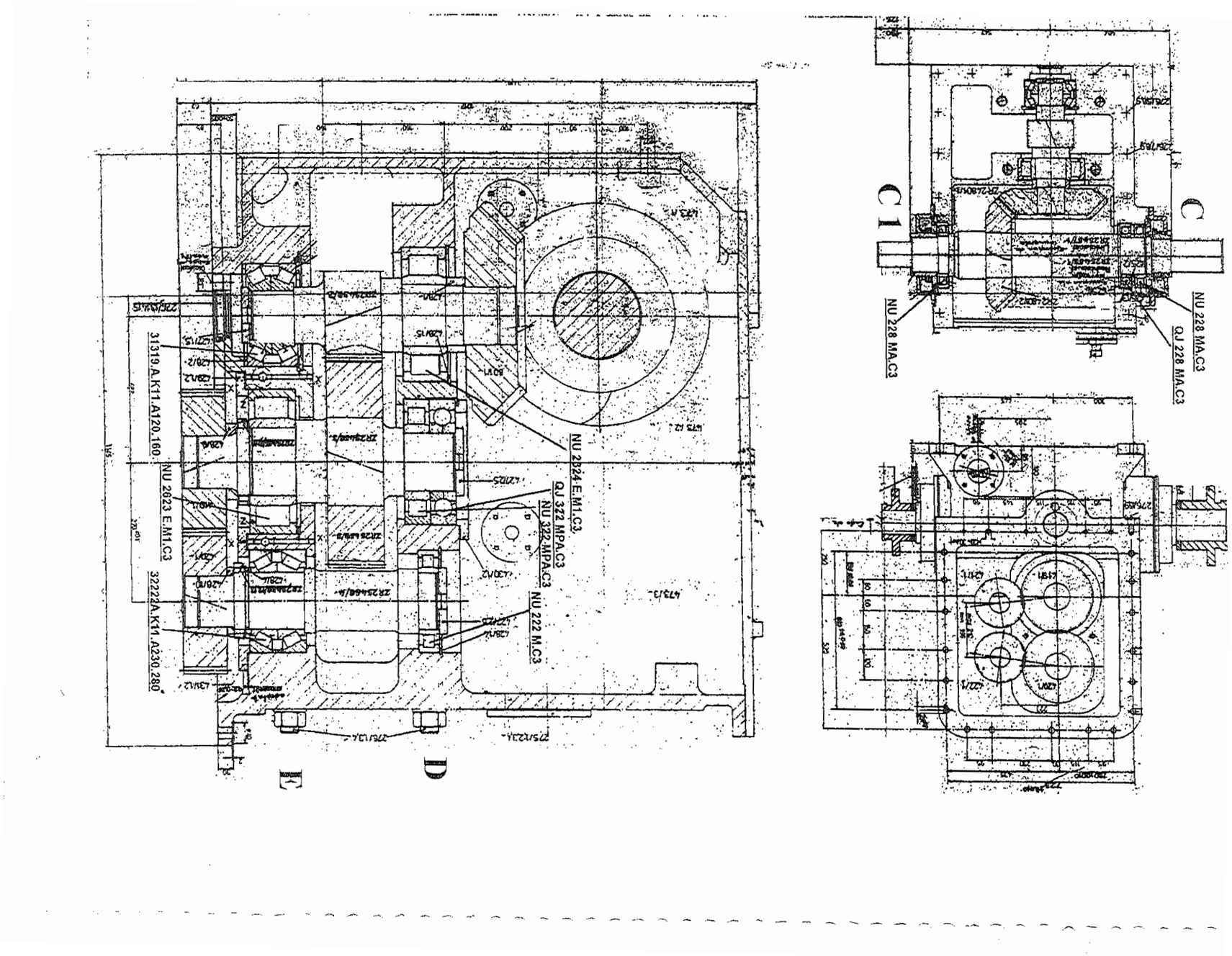
31319.A.K11.A120.160.
NU 2623 E.M1.C3
32222A.K11.A230.280
NU 2824 E.M1.C3.
QJ 322 MPA.C3
NU 322 MPA.C3
NU 222 M.C3
NU 228 MA.C3
QJ 228 MA.C3
C
C 1
D

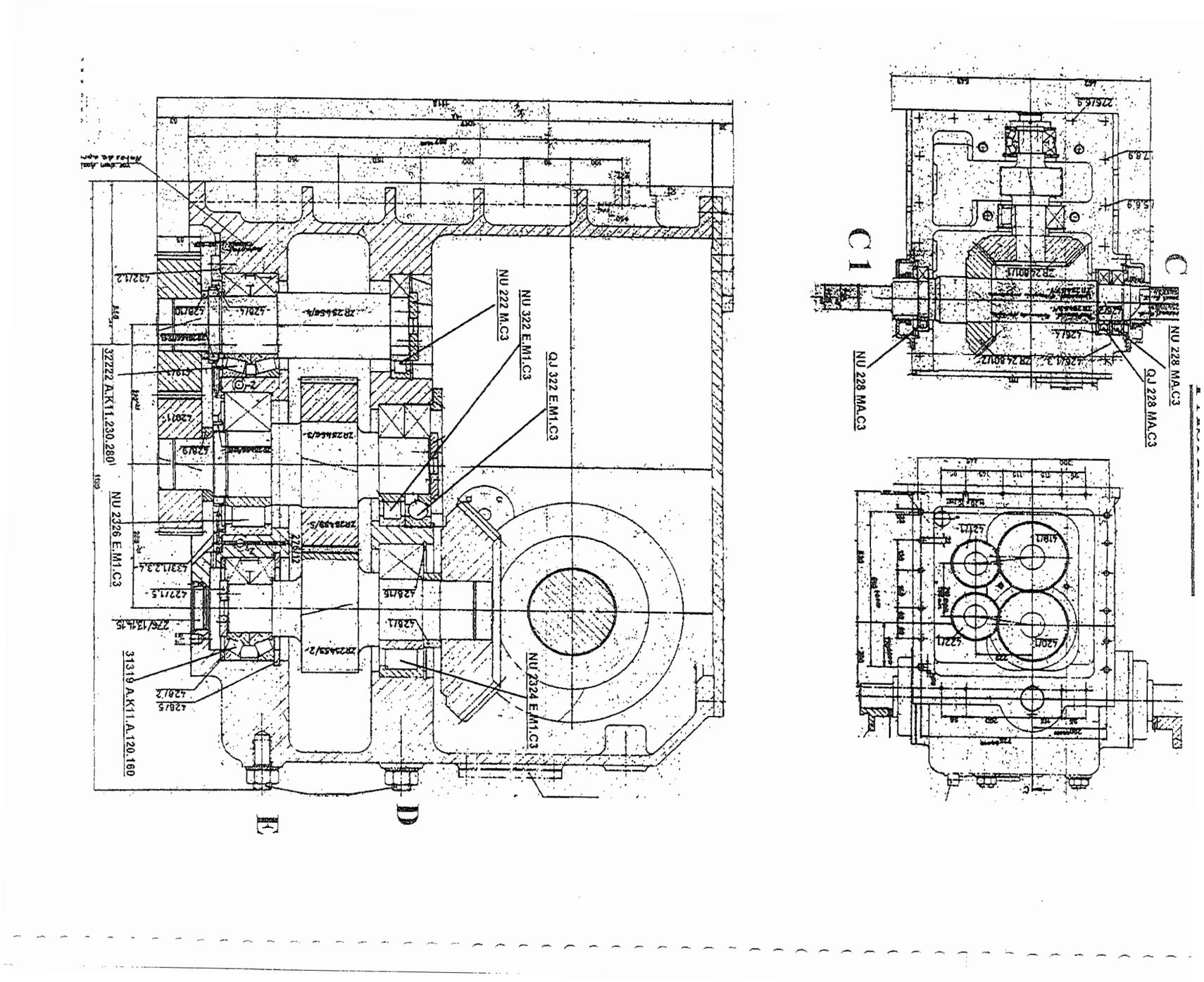
NU 228 MA.C3
QJ 228 MA.C3
NU 228 MA.C3
C 1
NU 322 E.M1.C3
NU 222 M.C3
QJ 322 E.M1.C3
322222 A.K11.230.280
NU 2326 E.M1.C3
31319 A.K11.A.120.160
NU 2324 E.M1.C3

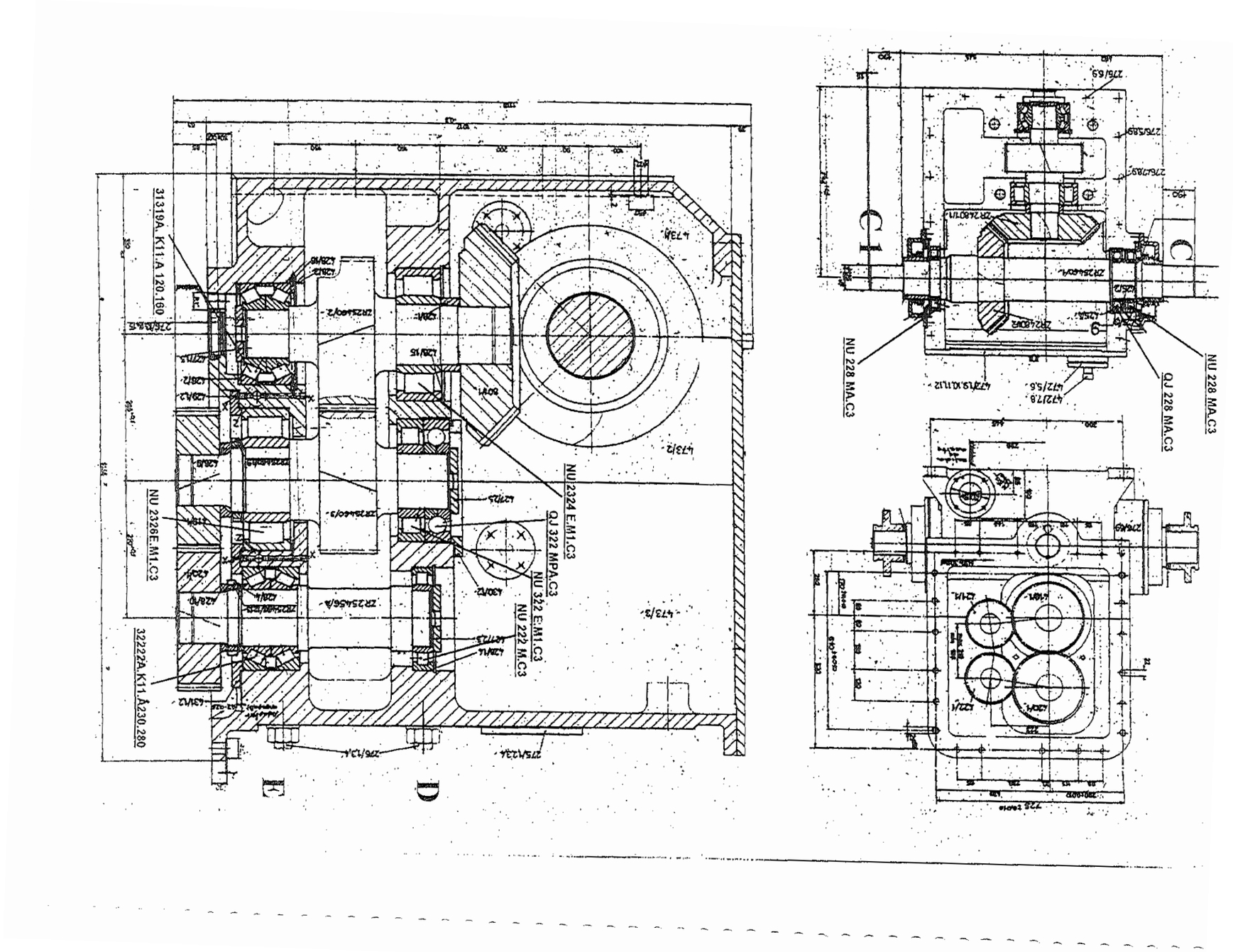
31319A. K11.A 120.160
NU 2328E.M1.C3
322222A.K11.A230.280
NU 2324 E.M1.C3
QJ 322 MPA.C3
NU 322 E.M1.C3
NU 222 M.C3
NU 228 MA.C3
QJ 228 MA.C3
NU 228 MA.C3
C1
C

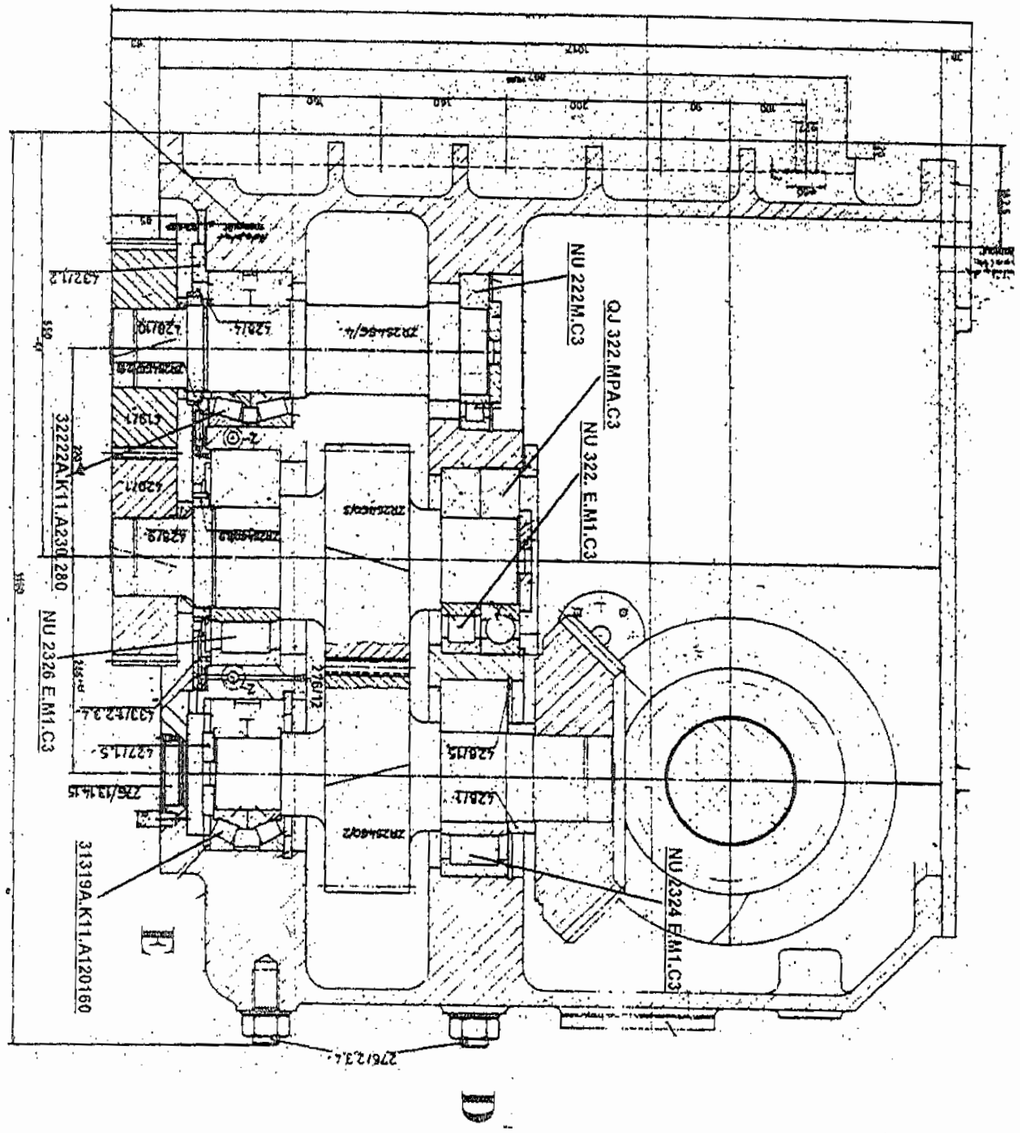
NU 222M.C3
QJ 322.MPA.C3
NU 322. E.M1.C3
32222A.K11.A230.280
NU 2326 E.M1.C3
31319A.K11.A120160
NU 2324 E.M1.C3
E

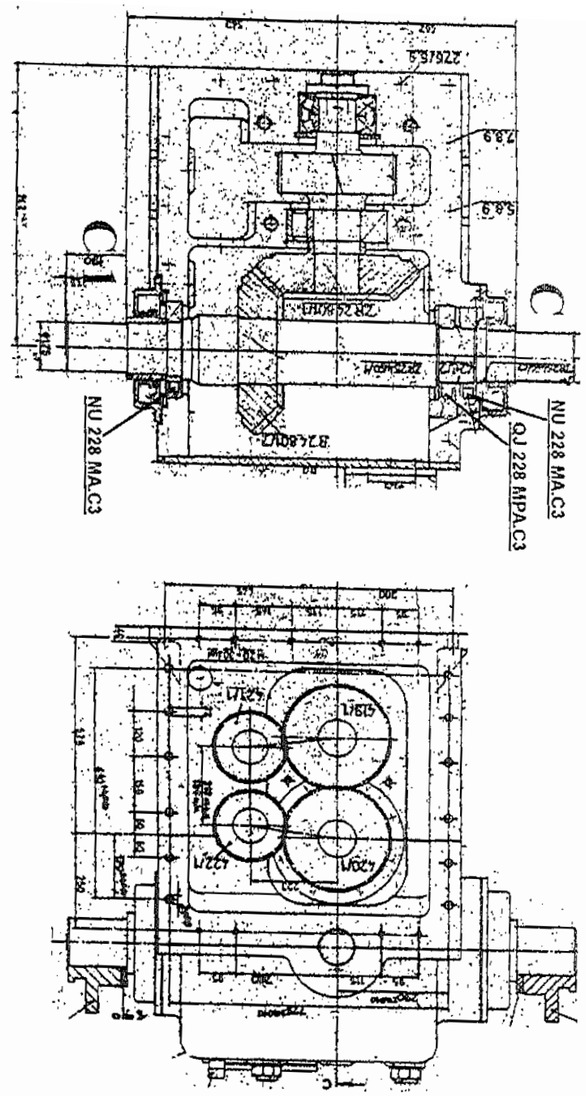
C
C1
NU 228 MA.C3
QJ 228 MPA.C3
NU 228 MA.C3

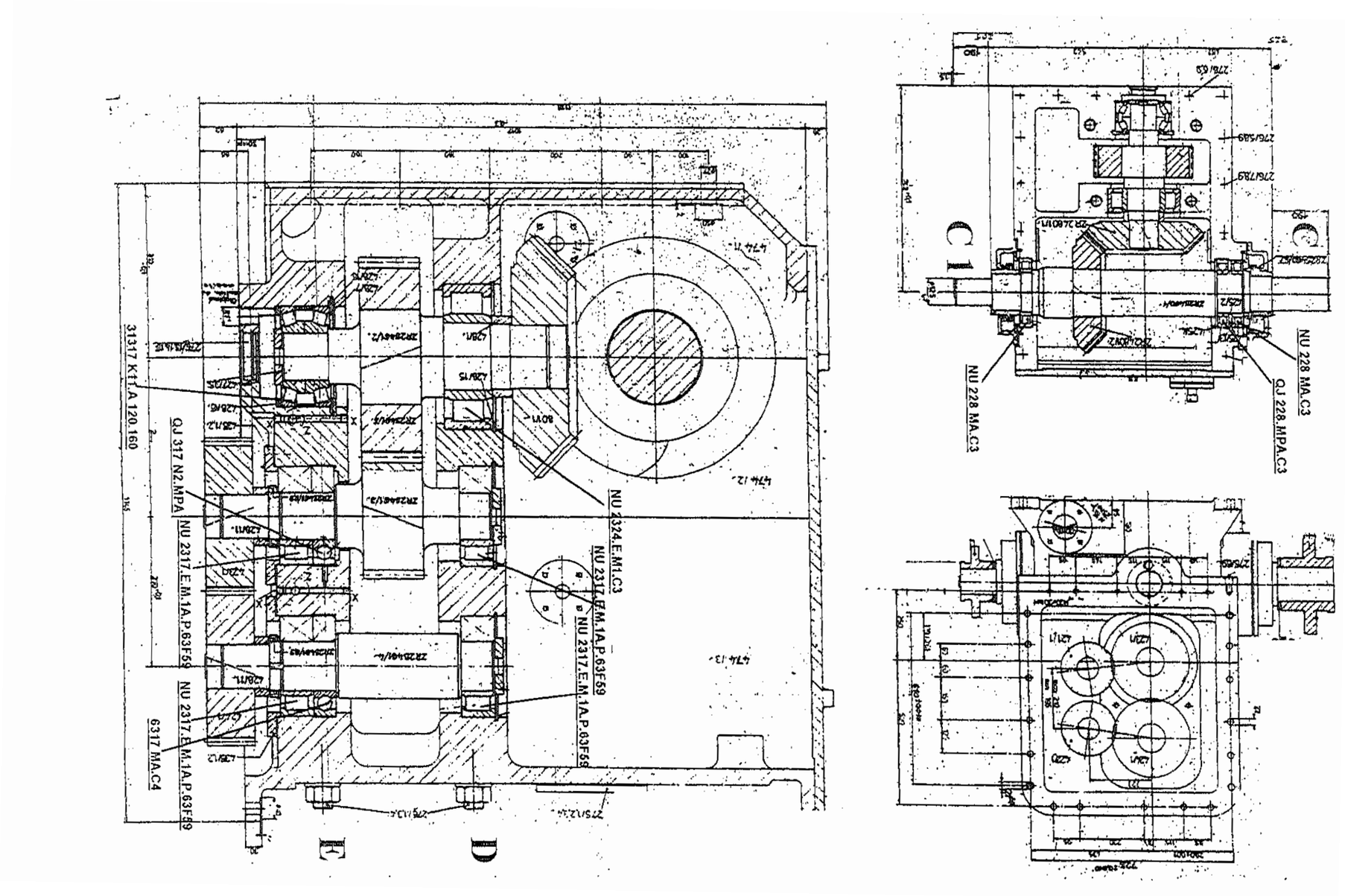
31317 K11.A 120.160
QJ 317 N2.MPA
NU 2317.E.M.1A.P.63F59
NU 2317.E.M.1A.P.63F59
6317 MA.C4
NU 2324.E.M1.C3
NU 2317.E.M.1A.P.63F59
NU 2317.E.M.1A.P.63F59
NU 228 MA.C3
QJ 228.MPA.C3
NU 228 MA.C3
C1
D

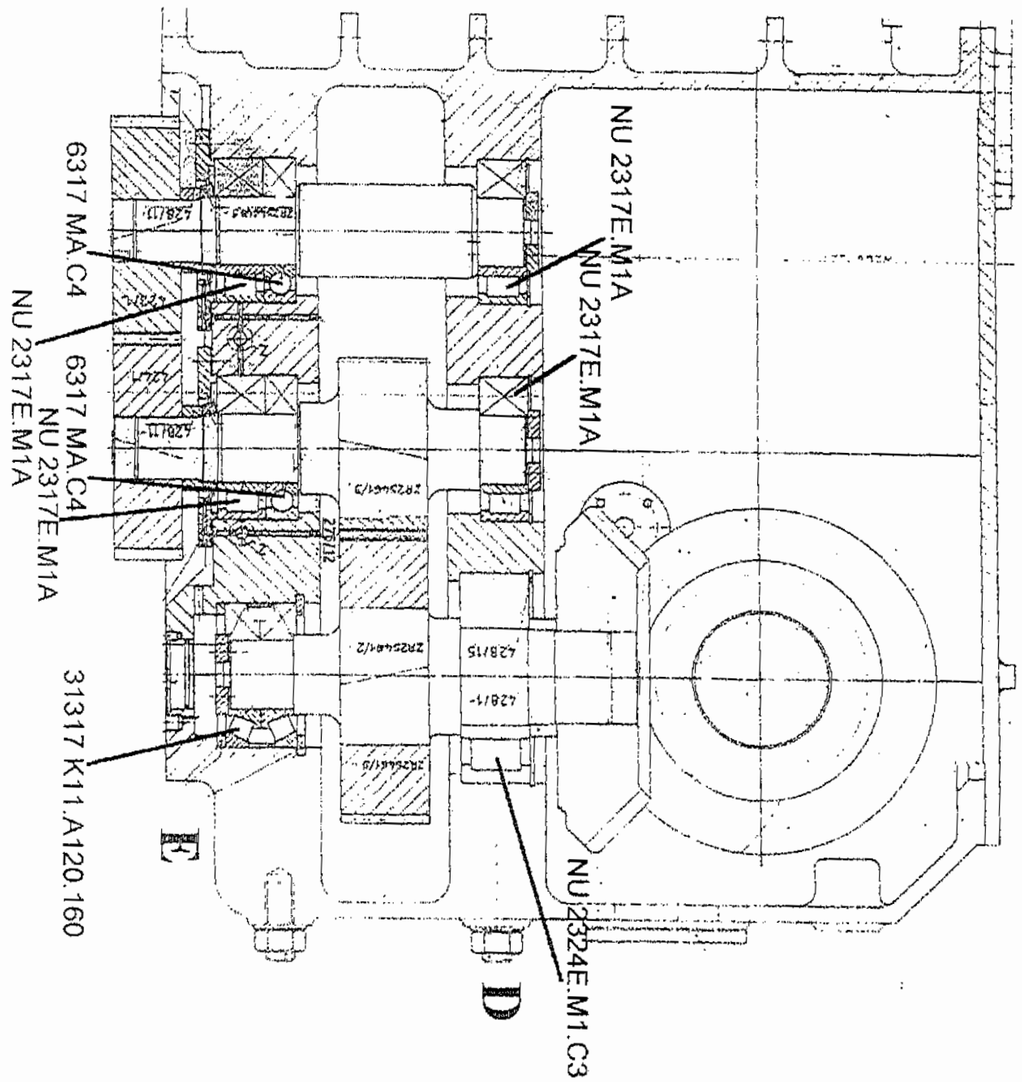
NU 2317E.M1A
NU 2317E.M1A
6317 MA.C4
6317 MA.C4
NU 2317E.M1A
NU 2317E.M1A
31317 K11.A120.160
NU 2324E.M1.C3
E
D

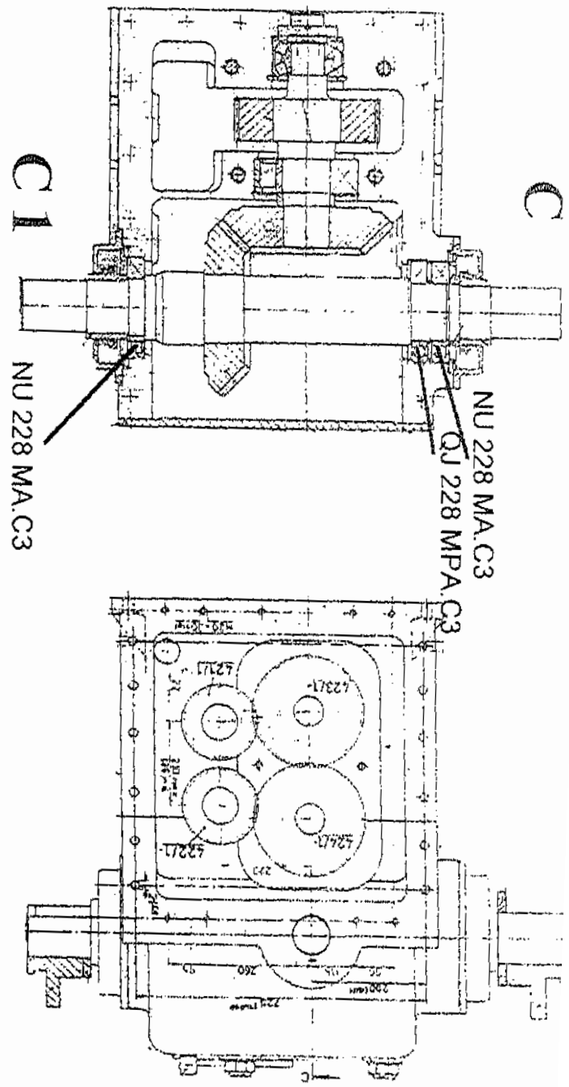
C
C 1
NU 228 MA.C3
QJ 228 MPA.C3
NU 228 MA.C3

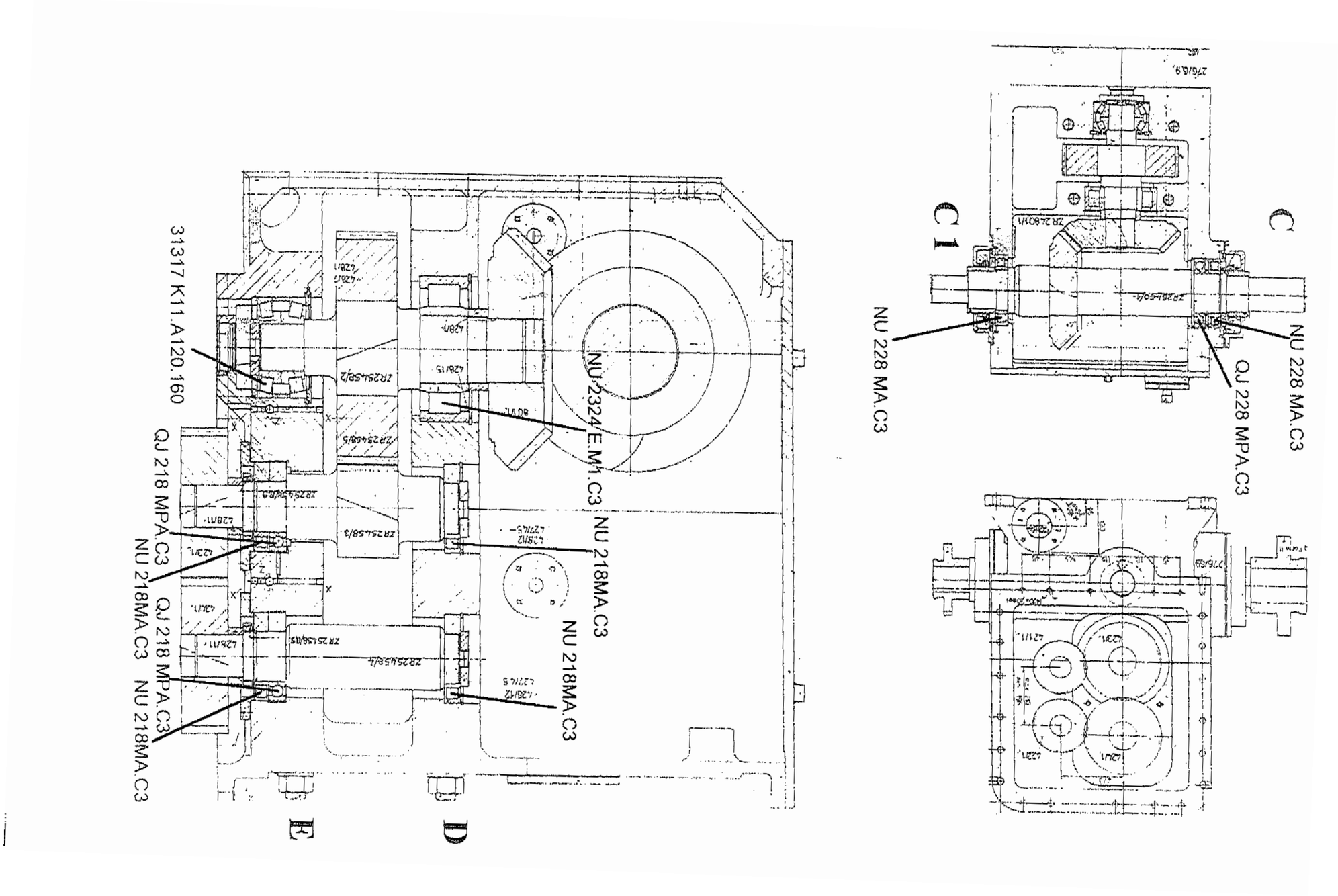
C
C1
NU 228 MA.C3
QJ 228 MPA.C3
NU 228 MA.C3
NU 2324 E.M1.C3
NU 218MA.C3
NU 218MA.C3
31317 K11.A120.160
QJ 218 MPA.C3
NU 218MA.C3
QJ 218 MPA.C3
NU 218MA.C3
D
E

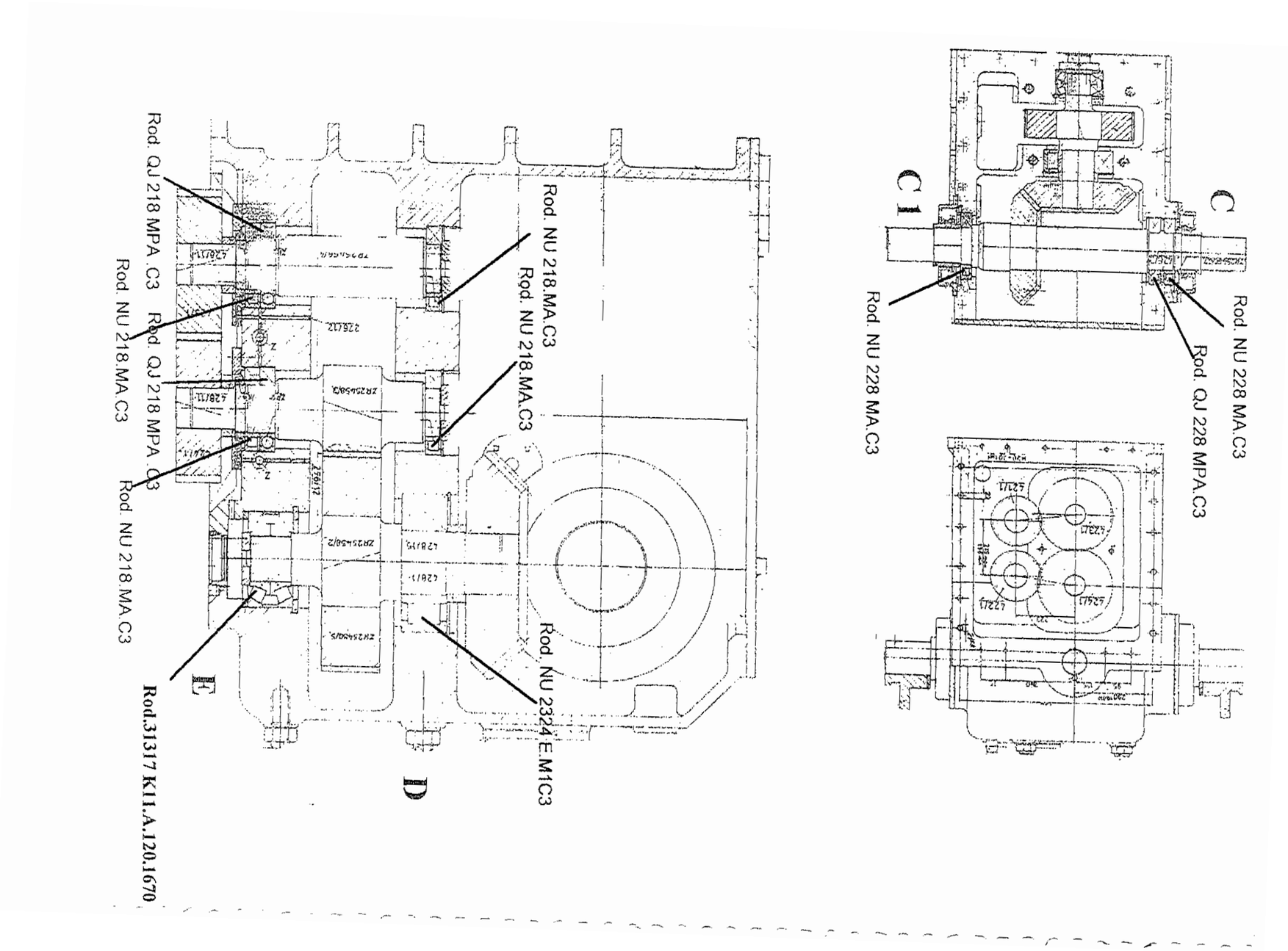
Rod. NU 228 MA.C3
Rod. QJ 228 MPA.C3
Rod. NU 228 MA.C3
C
C1
Rod. NU 218.MA.C3
Rod. NU 218.MA.C3
Rod. QJ 218 MPA .C3
Rod. QJ 218 MPA .C3
Rod. NU 218.MA.C3
Rod. NU 218.MA.C3
Rod. NU 2324.E.M1C3
Rod.31317 K11.A.120.1670
D
E

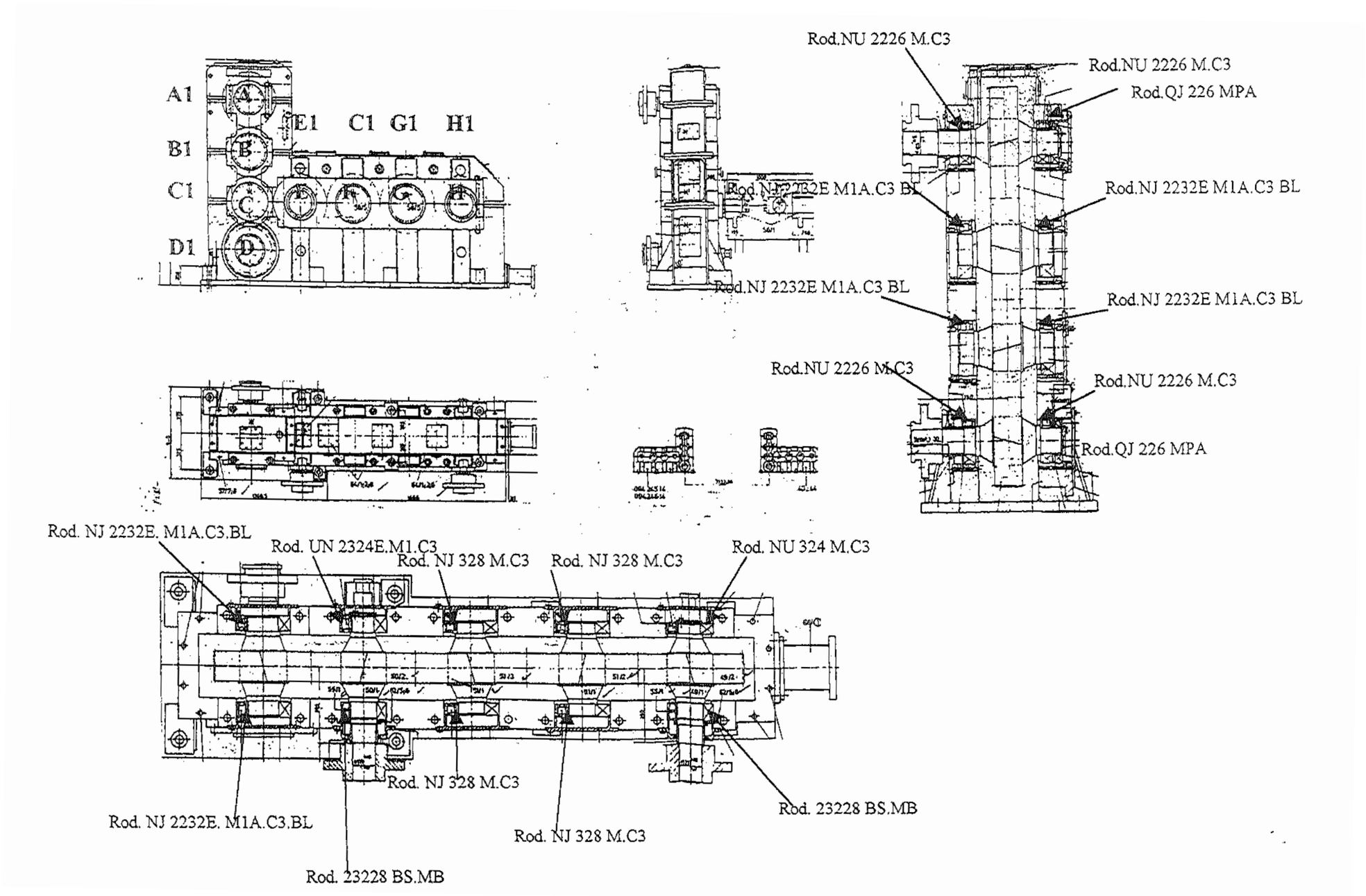
A1
B1
C1
D1
E1
C1
G1
H1
Rod.NU 2226 M.C3
Rod.NU 2226 M.C3
Rod.QJ 226 MPA
Rod.NJ 2232E M1A.C3 BL
Rod.NJ 2232E M1A.C3 BL
Rod.NJ 2232E M1A.C3 BL
Rod.NJ 2232E M1A.C3 BL
Rod.NU 2226 M.C3
Rod.NU 2226 M.C3
Rod.QJ 226 MPA
Rod. NJ 2232E. M1A.C3.BL
Rod. UN 2324E.M1.C3
Rod. NJ 328 M.C3
Rod. NJ 328 M.C3
Rod. NU 324 M.C3
Rod. NJ 328 M.C3
Rod. 23228 BS.MB
Rod. NJ 2232E. M1A.C3.BL
Rod. NJ 328 M.C3
Rod. 23228 BS.MB

MINIBLOCK 2 STANDS MORGAN

MORGAN MACHINERY

Years of manufacturing 1991

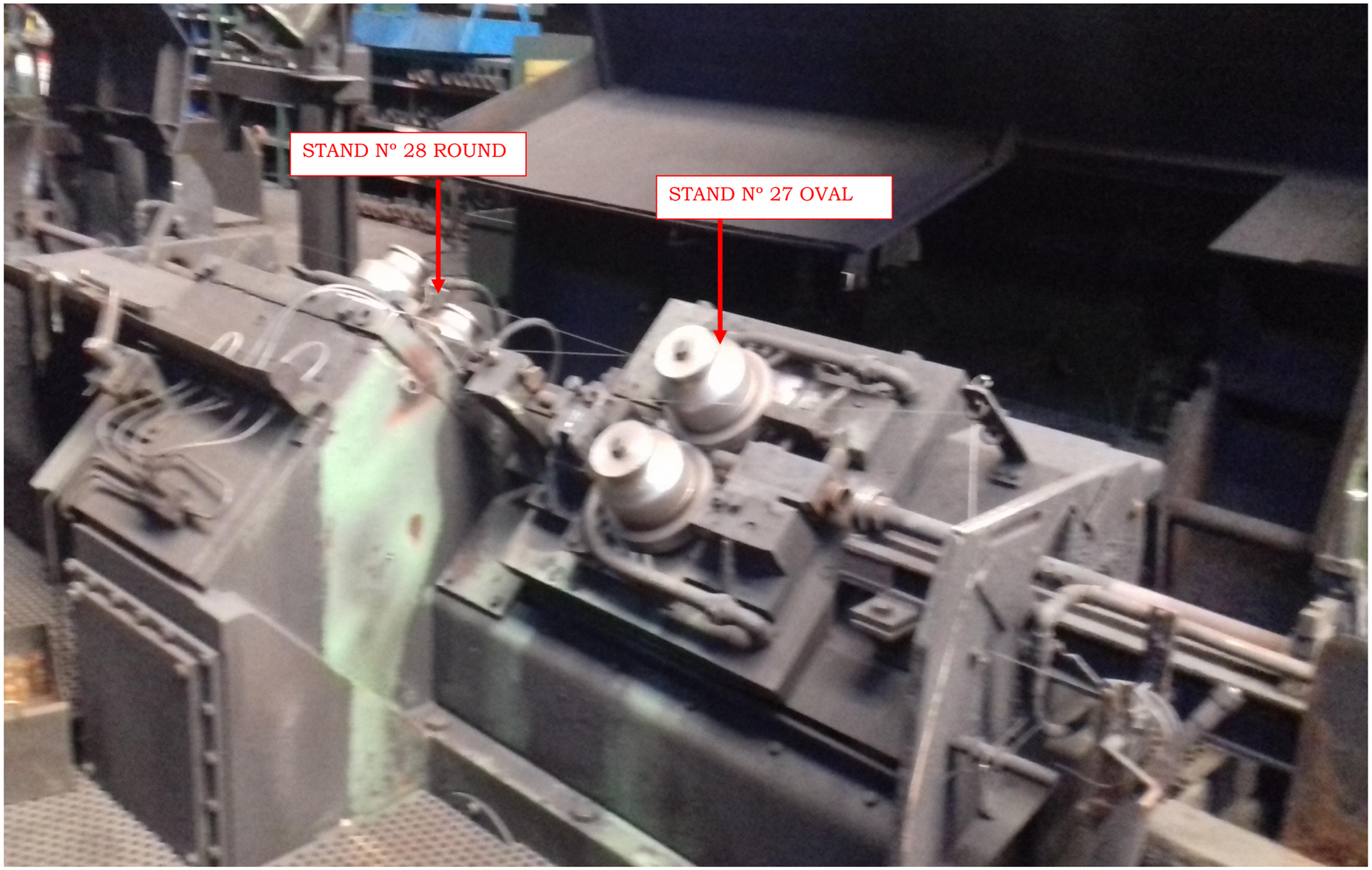

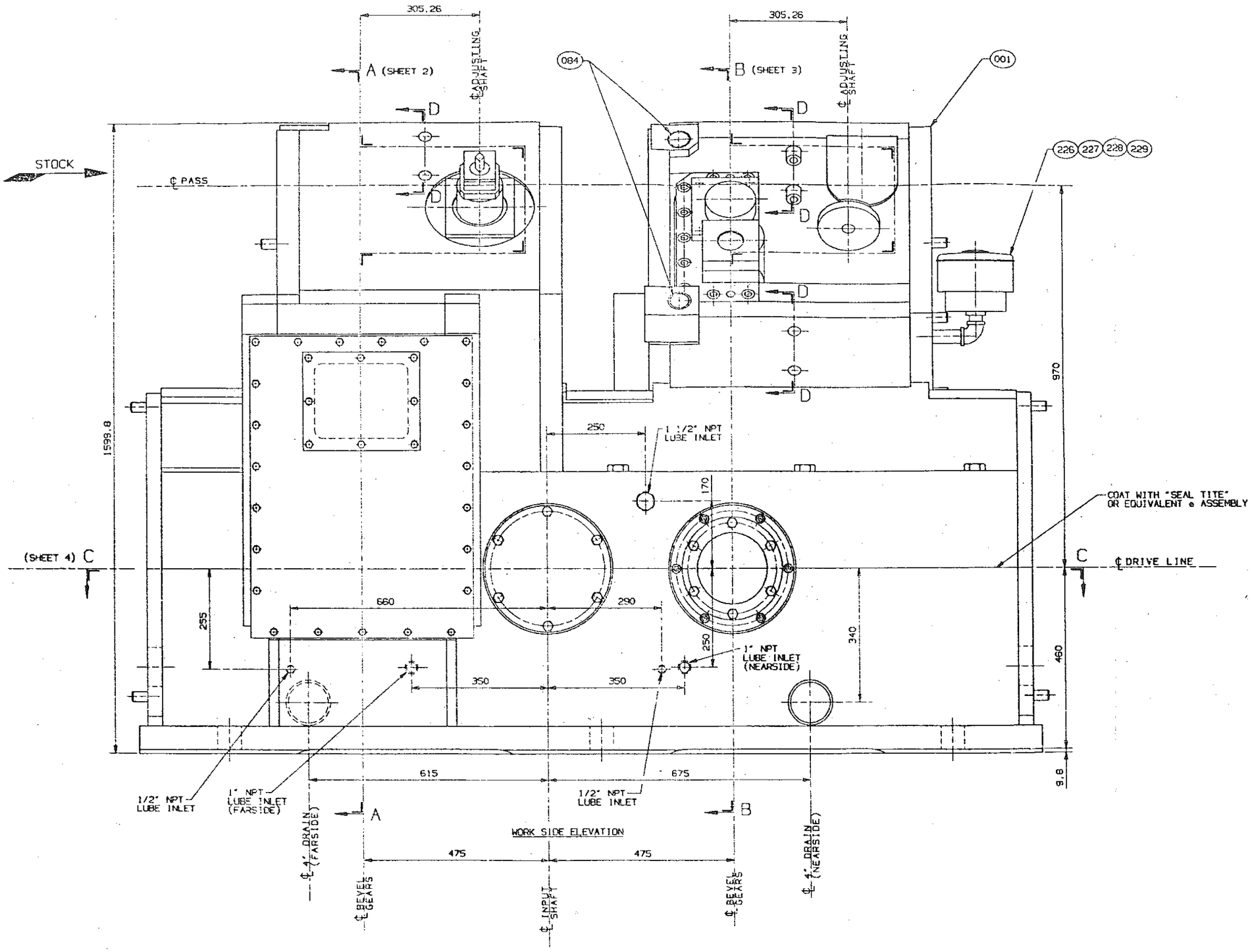
305.26
305.26
A (SHEET 2)
B (SHEET 3)
℄ ADJUSTING SHAFT
℄ ADJUSTING SHAFT
084
001
226 227 228 229
STOCK
℄ PASS
D
1599.8
970
250
1 1/2" NPT LUBE INLET
170
COAT WITH "SEAL TITE" OR EQUIVALENT @ ASSEMBLY
(SHEET 4) C
C
℄ DRIVE LINE
660
290
255
250
340
460
1" NPT LUBE INLET (NEARSIDE)
350
350
615
675
9.8
1/2" NPT LUBE INLET
1" NPT LUBE INLET (FARSIDE)
1/2" NPT LUBE INLET
A
B
WORK SIDE ELEVATION
475
475
℄ 4" DRAIN (FARSIDE)
℄ BEVEL GEARS
℄ INPUT SHAFT
℄ BEVEL GEARS
℄ 4" DRAIN (NEARSIDE)

MINIBLOCK MORGAN

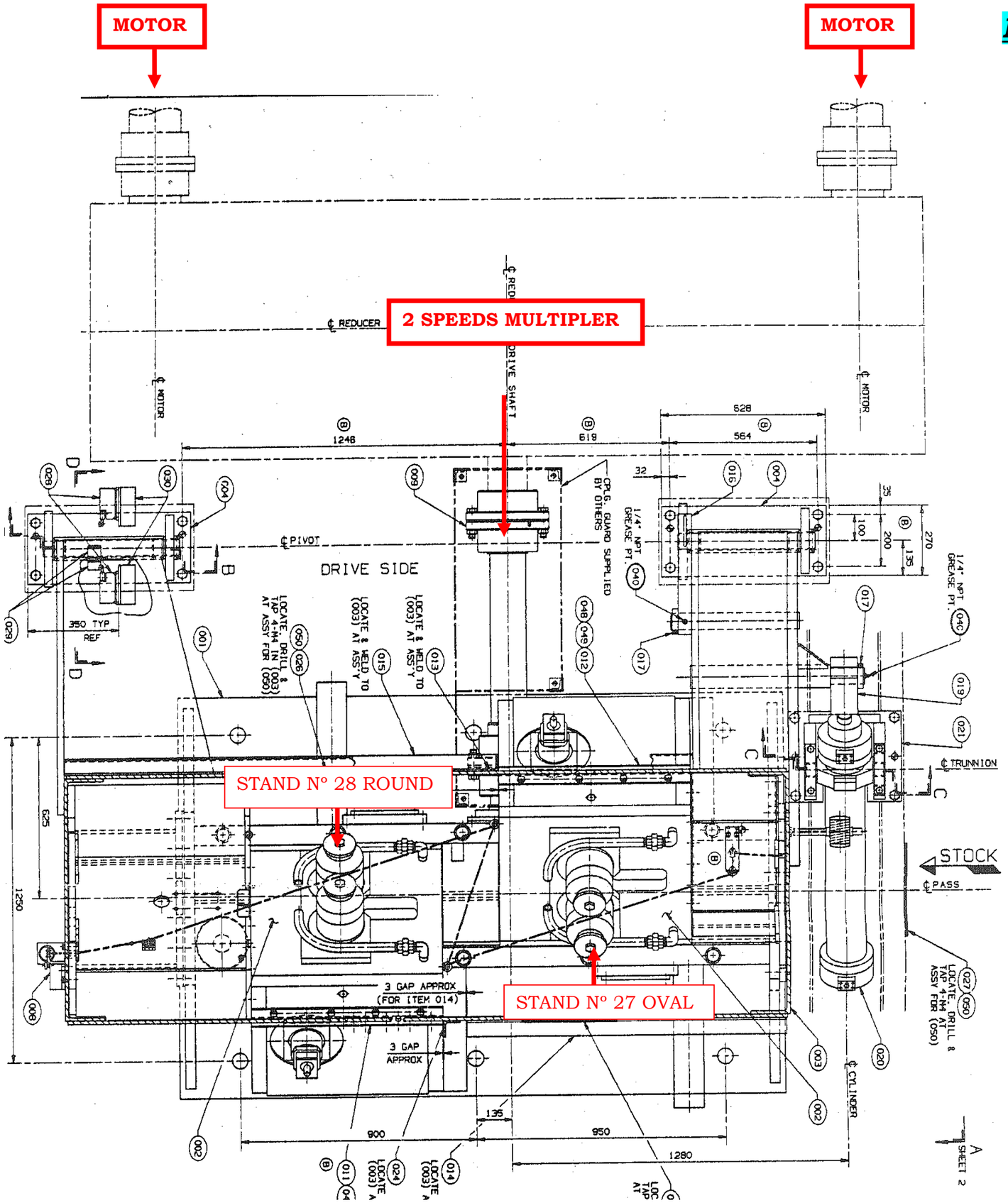

MINIBLOCK MORGAN

A and B lines

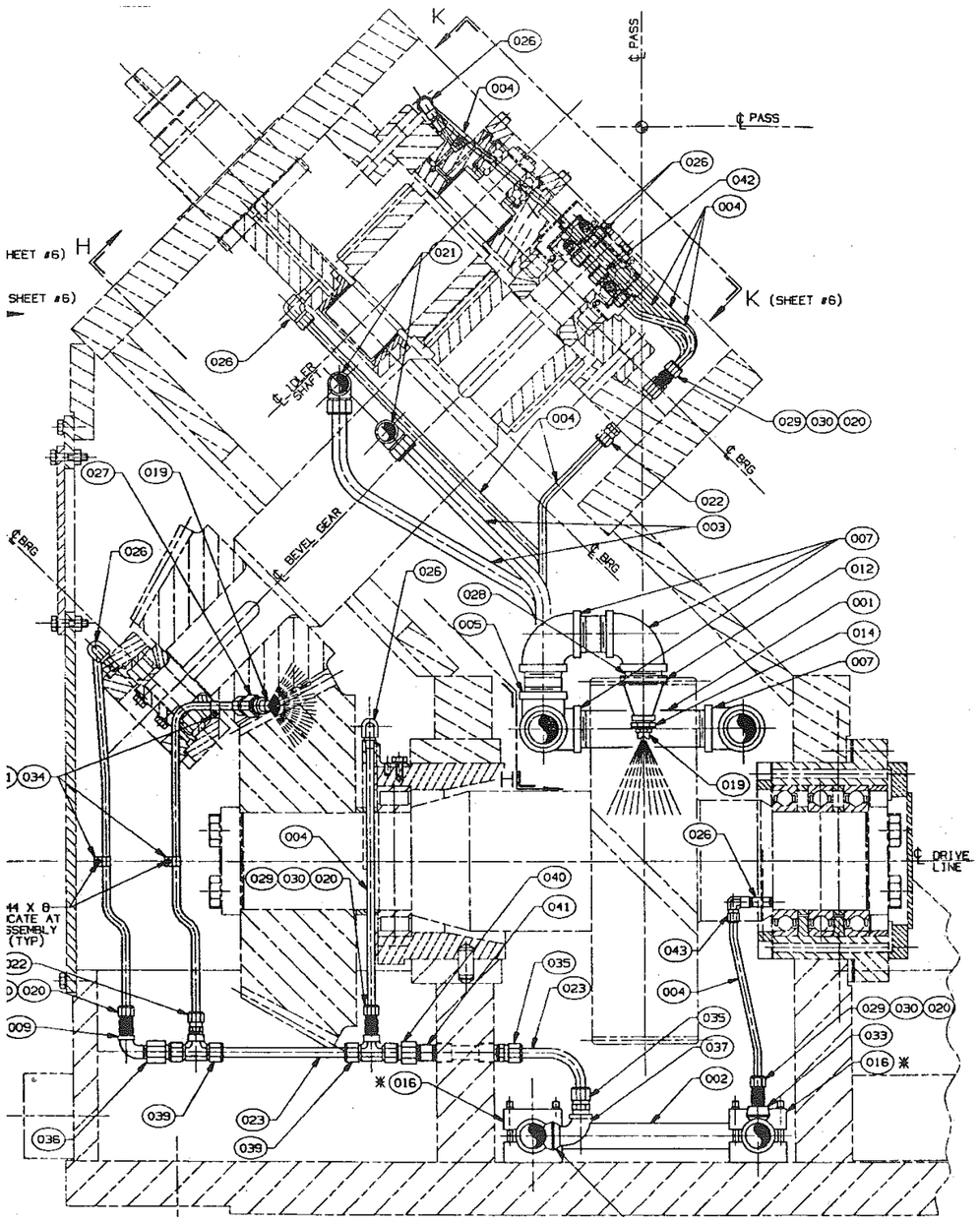

OVAL

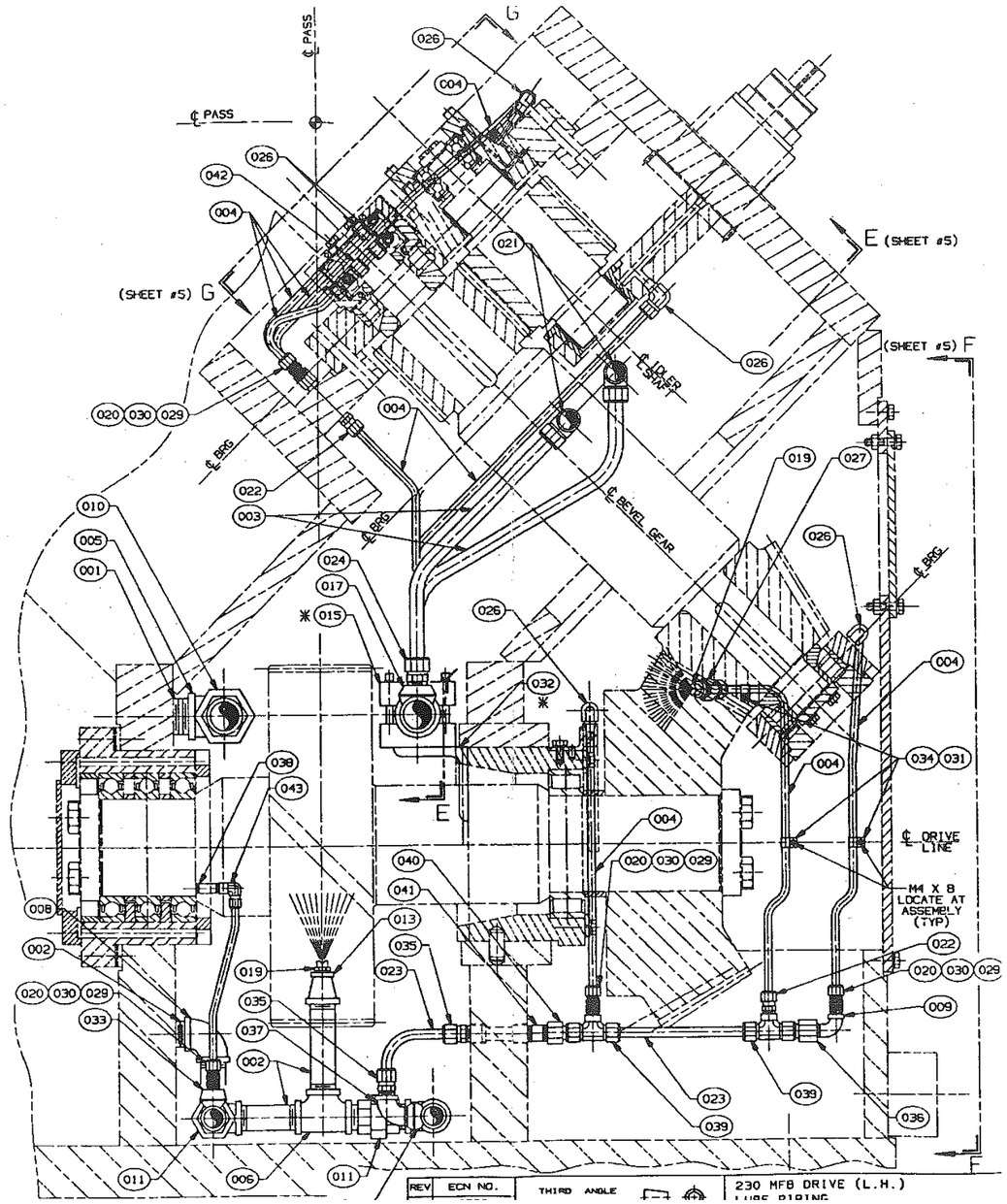

ROUND

GEAR BOX

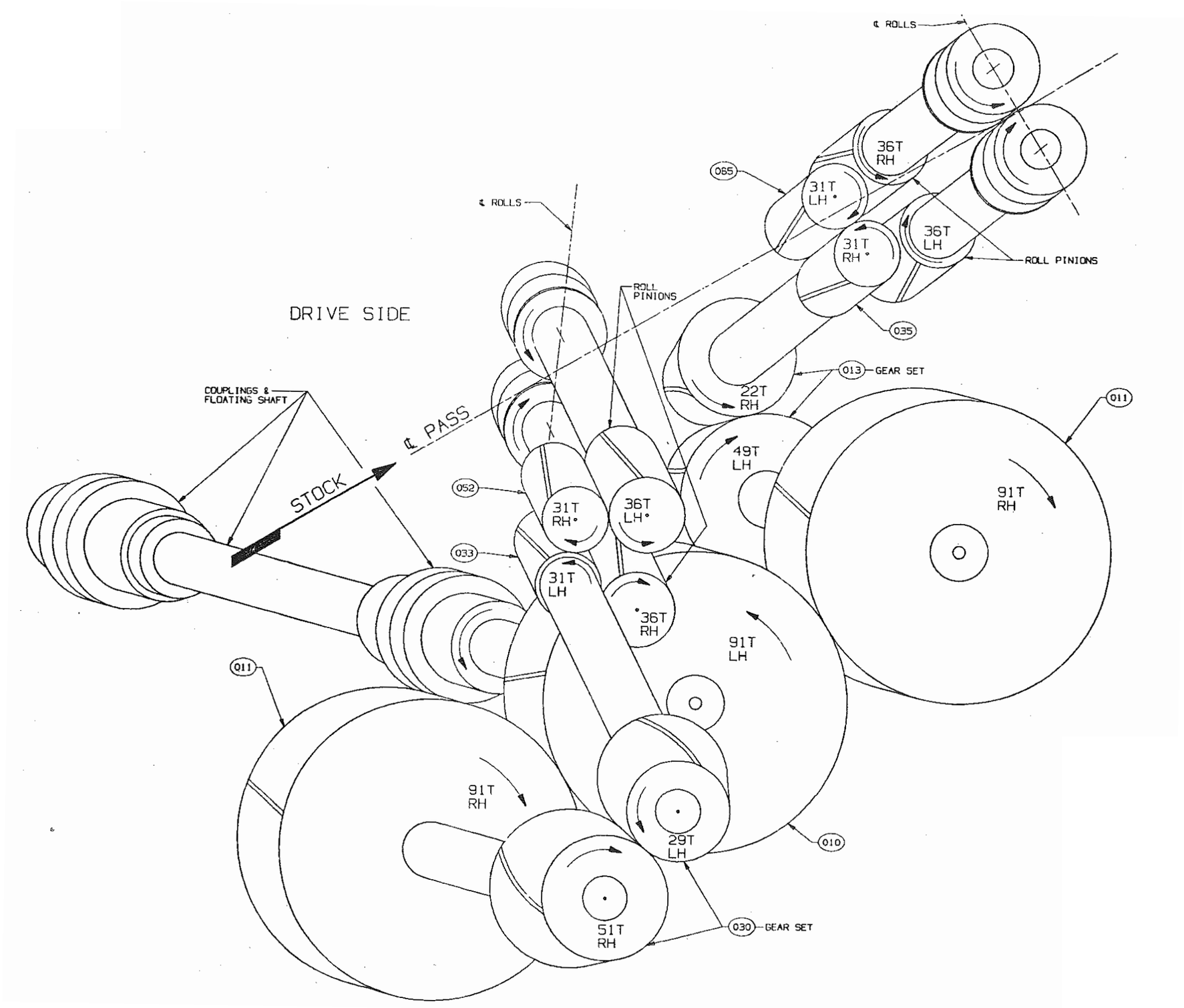
℄ ROLLS
36T
RH
065
31T
LH
36T
LH
31T
RH
ROLL PINIONS
℄ ROLLS
ROLL
PINIONS
DRIVE SIDE
035
013
GEAR SET
22T
RH
011
COUPLINGS &
FLOATING SHAFT
℄ PASS
STOCK
49T
LH
052
31T
RH
36T
LH
91T
RH
033
31T
LH
36T
RH
91T
LH
011
91T
RH
29T
LH
010
51T
RH
030
GEAR SET

LOWER GEAR BOX

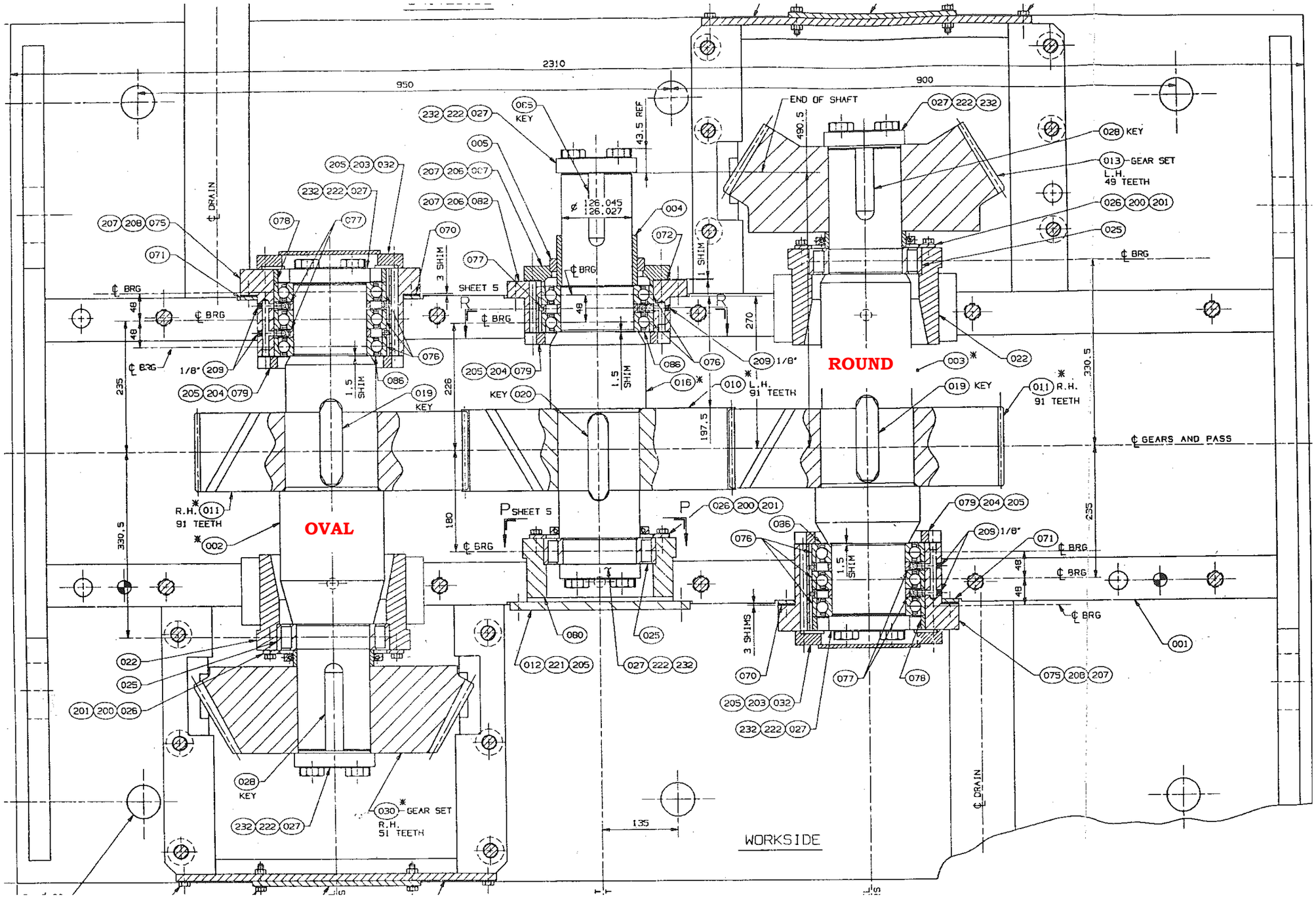

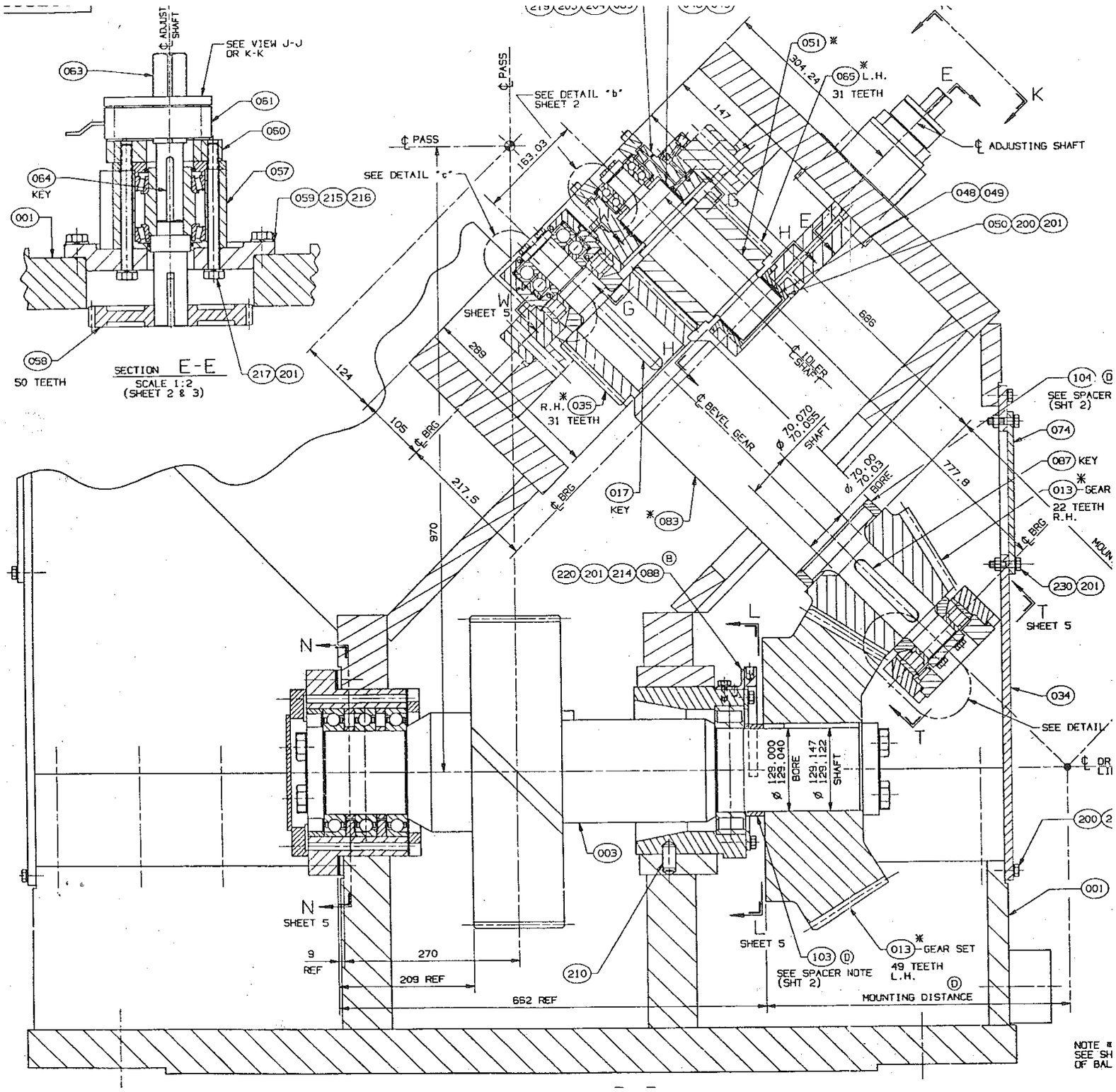
SEE VIEW J-J OR K-K
℄ ADJUST SHAFT
063
061
060
057
064 KEY
059 215 216
001
058
50 TEETH
SECTION E-E
SCALE 1:2
(SHEET 2 & 3)
217 201
℄ PASS
SEE DETAIL "b" SHEET 2
SEE DETAIL "c"
163.03
SHEET 5
124
105
℄ BRG
217.5
970
R.H. 035
31 TEETH
017 KEY
083
220 201 214 088
051
304.24
065 L.H.
31 TEETH
147
℄ ADJUSTING SHAFT
048 049
050 200 201
686
℄ IDLER SHAFT
℄ BEVEL GEAR
ø 70.070 70.055 SHAFT
ø 70.09 70.03 BORE
777.8
104
SEE SPACER (SHT 2)
074
087 KEY
013 GEAR
22 TEETH R.H.
230 201
SHEET 5
034
SEE DETAIL
ø 129.000 129.040 BORE
ø 129.147 129.122 SHAFT
003
210
200
001
013 GEAR SET
49 TEETH L.H.
103
SEE SPACER NOTE (SHT 2)
MOUNTING DISTANCE
9 REF
270
209 REF
662 REF

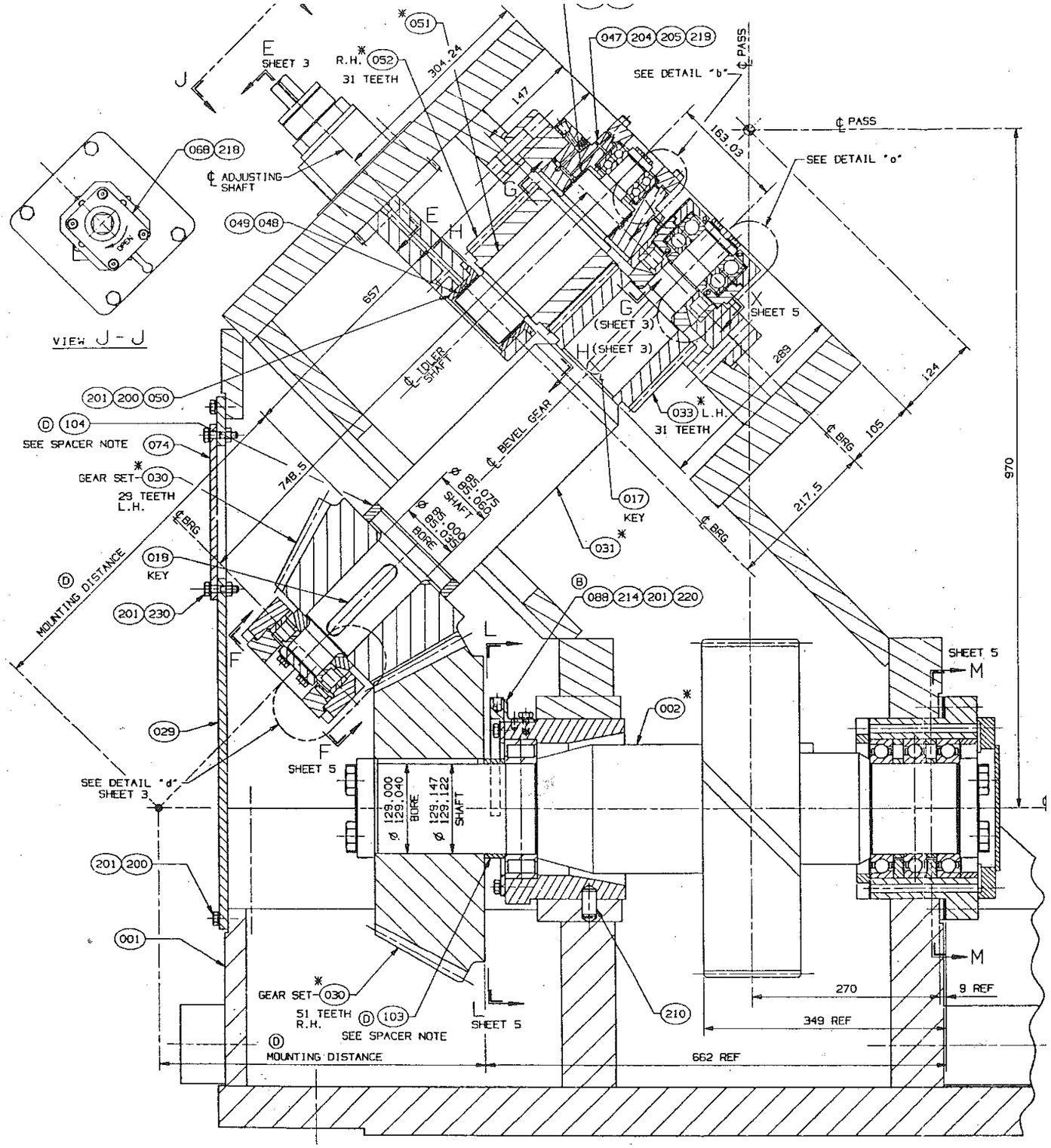
VIEW J - J
SHEET 3
R.H. 052
31 TEETH
051
304.24
147
047 204 205 219
SEE DETAIL "b"
℄ PASS
163.03
SEE DETAIL "o"
068 218
℄ ADJUSTING SHAFT
049 048
657
℄ IDLER SHAFT
SHEET 5
(SHEET 3)
(SHEET 3)
289
124
033 L.H.
31 TEETH
℄ BRG
105
970
201 200 050
D 104
SEE SPACER NOTE
074
GEAR SET- 030
29 TEETH L.H.
748.5
℄ BEVEL GEAR
Ø 85.075 85.050 SHAFT
Ø 85.000 85.030 BORE
017 KEY
031
217.5
℄ BRG
℄ BRG
018 KEY
D MOUNTING DISTANCE
201 230
B 088 214 201 220
002
029
SEE DETAIL "d" SHEET 3
Ø 129.000 129.040 BORE
Ø 129.147 129.122 SHAFT
201 200
001
GEAR SET- 030
51 TEETH R.H.
D 103
SEE SPACER NOTE
D MOUNTING DISTANCE
SHEET 5
210
270
349 REF
9 REF
662 REF

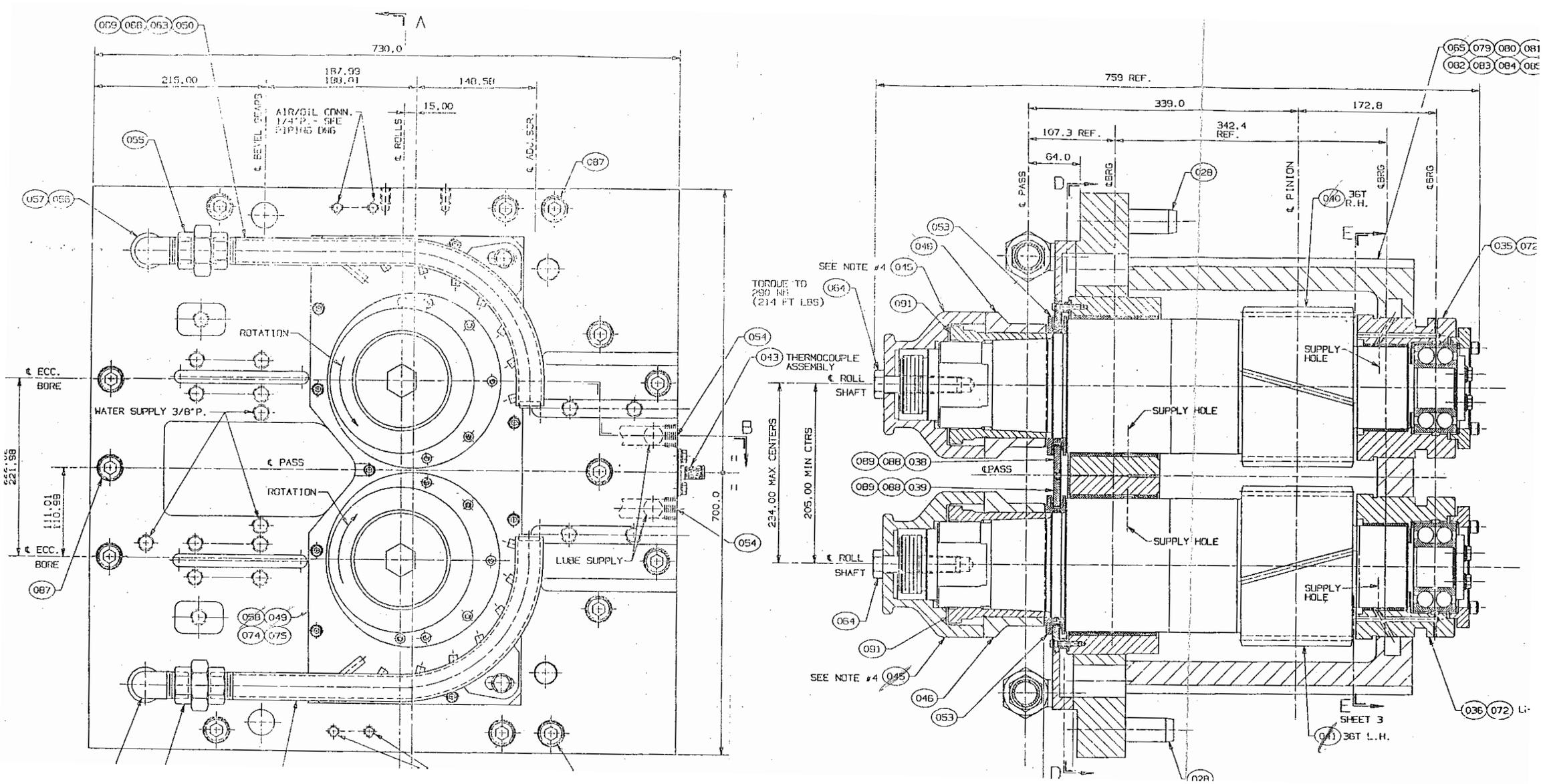
730.0
215.00
187.99
180.01
140.50
15.00
AIR/OIL CONN.
1/4"P. - SEE
PIPING DWG
℄ BEVEL GEARS
℄ ROLLS
℄ ADJ. SCR.
ROTATION
℄ ECC.
BORE
WATER SUPPLY 3/8"P.
℄ PASS
LUBE SUPPLY
700.0
759 REF.
339.0
172.8
107.3 REF.
342.4
REF.
64.0
℄BRG
℄ PINION
36T
R.H.
SEE NOTE #4
TORQUE TO
290 NM
(214 FT LBS)
THERMOCOUPLE
ASSEMBLY
℄ ROLL
SHAFT
SUPPLY
HOLE
234.00 MAX CENTERS
205.00 MIN CTRS
SHEET 3
36T L.H.

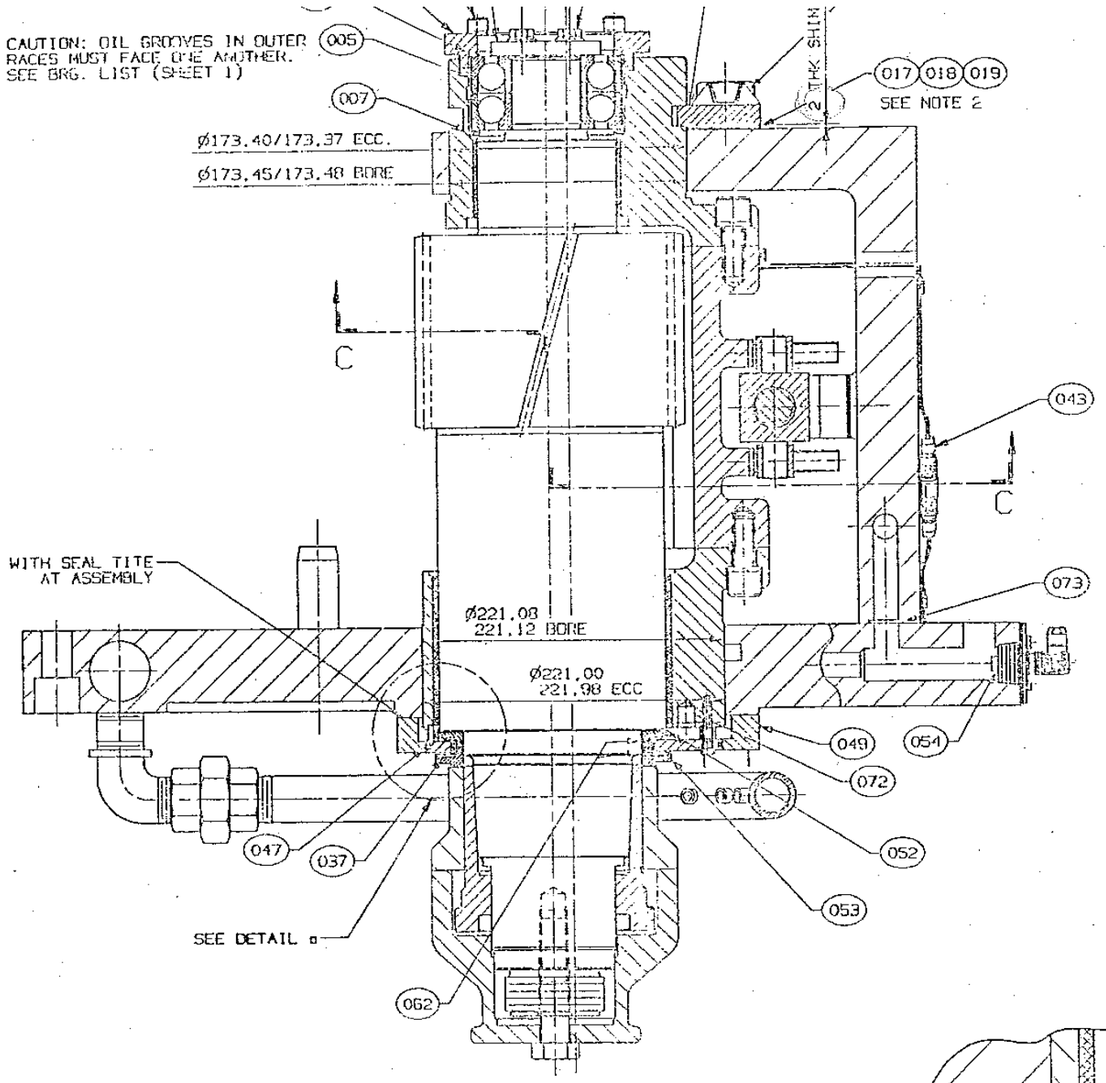

SECTION B - B

(SHEET 1)

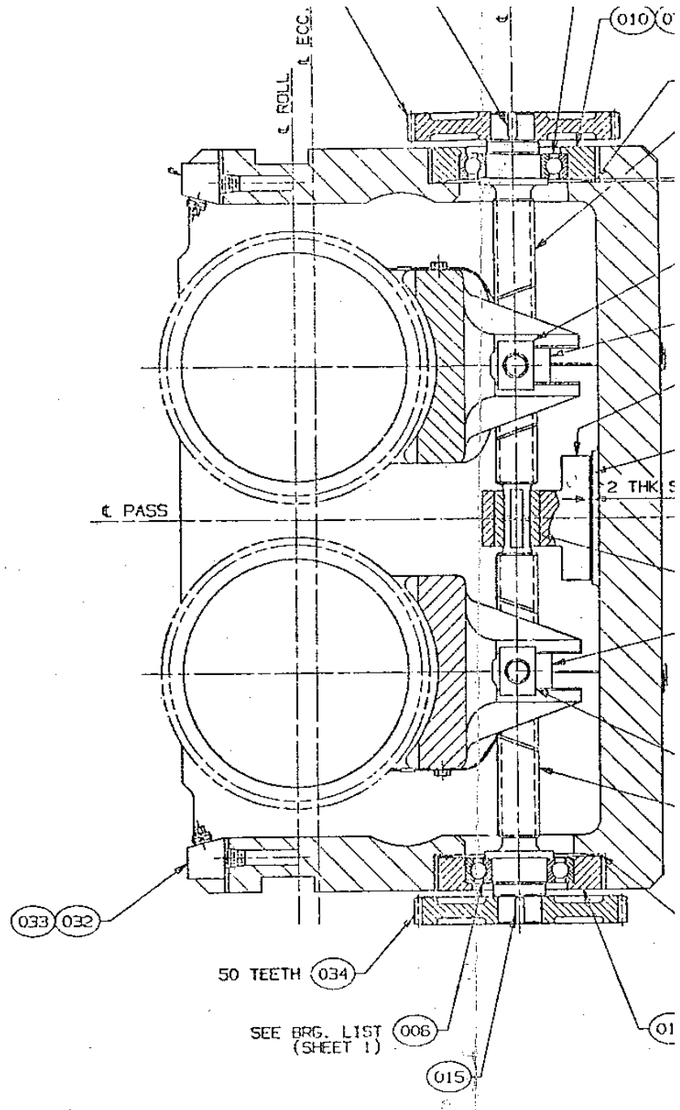

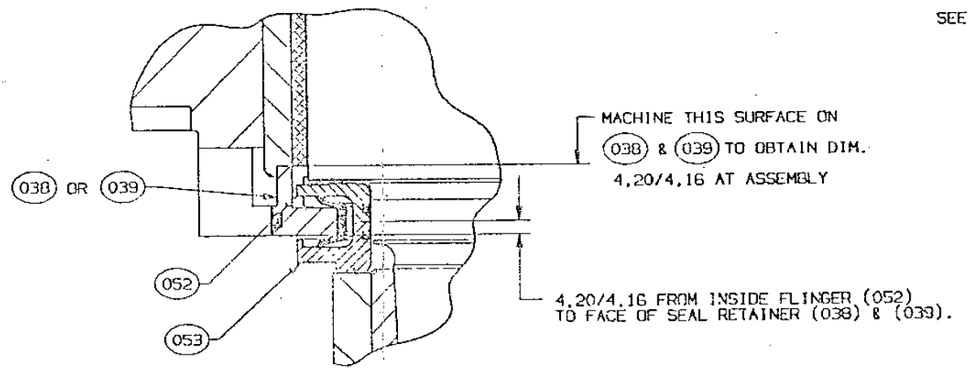

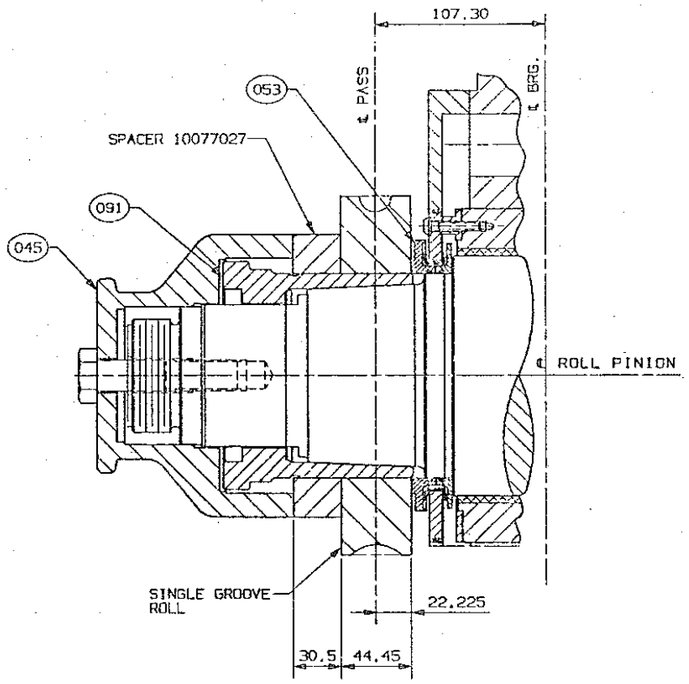

Ⓑ RUNNING COVER ARRANGEMENT FOR SINGLE GROOVE ROLL (10077024)

NOTE: ALL DIMENSIONS SHOWN ARE NOMINAL.

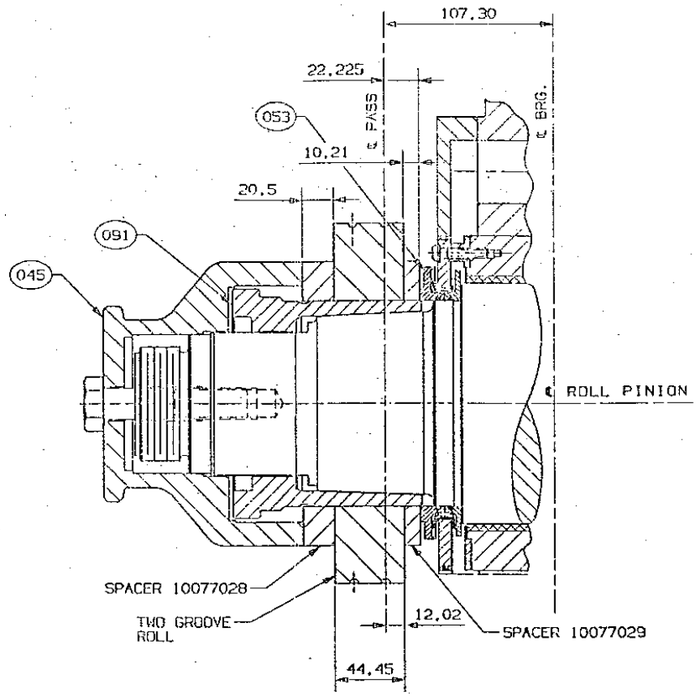

Ⓑ RUNNING COVER ARRANGEMENT FOR TWO GROOVE ROLLS (10077024)

NOTE: ALL DIMENSIONS SHOWN ARE NOMINAL.

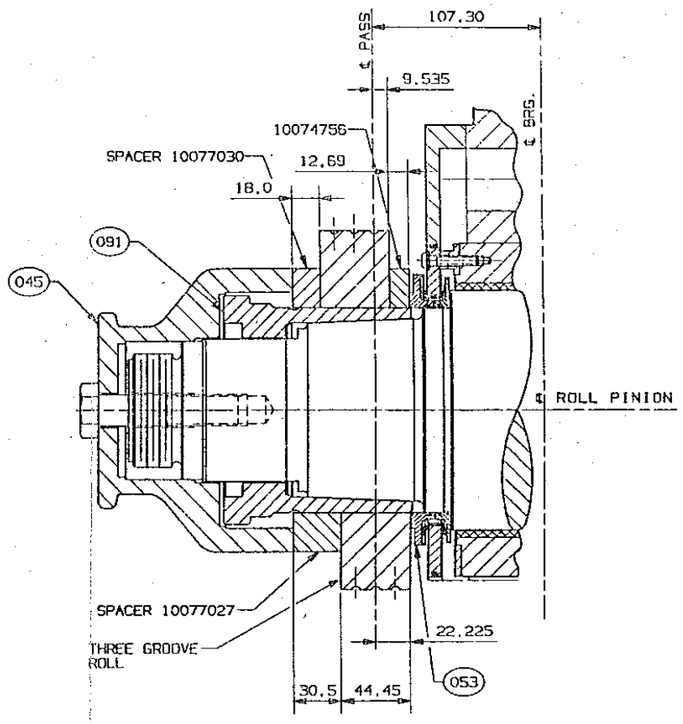

Ⓑ RUNNING COVER ARRANGEMENT FOR THREE GROOVE ROLLS (10077024)

NOTE: ALL DIMENSIONS SHOWN ARE NOMINAL.

PIPE NETWORK

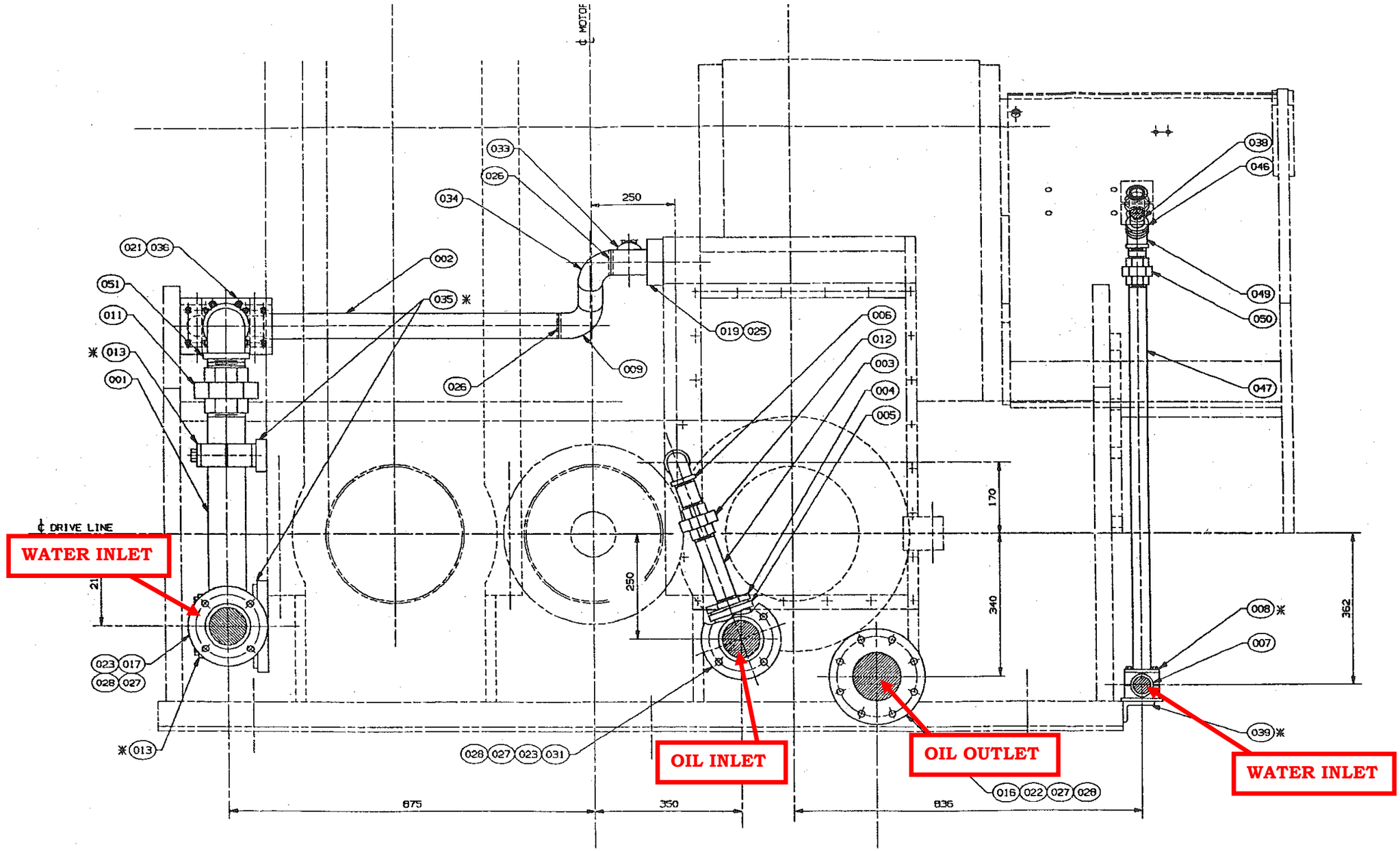

PIPE NETWORK

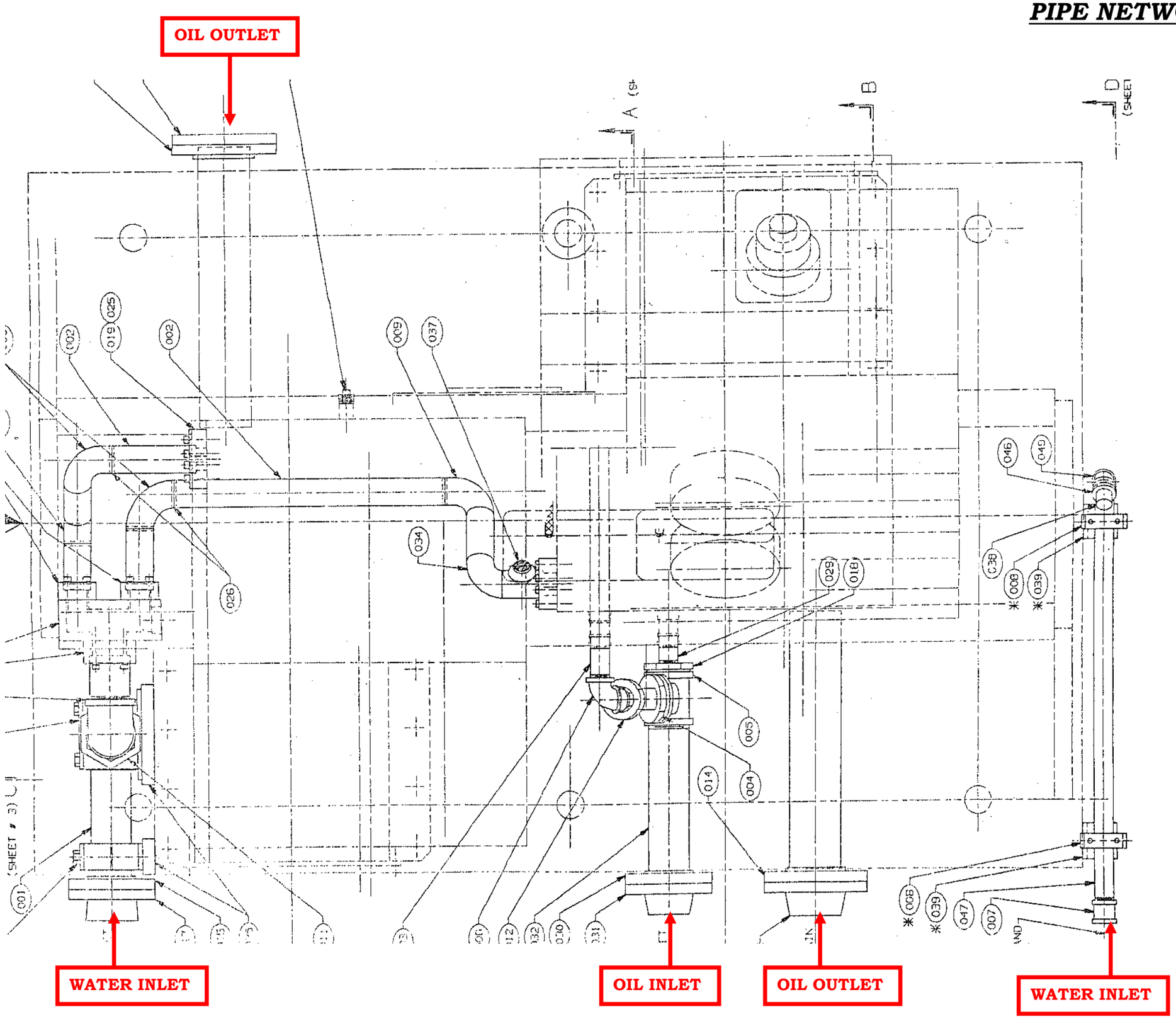

OIL PIPE NETWORK

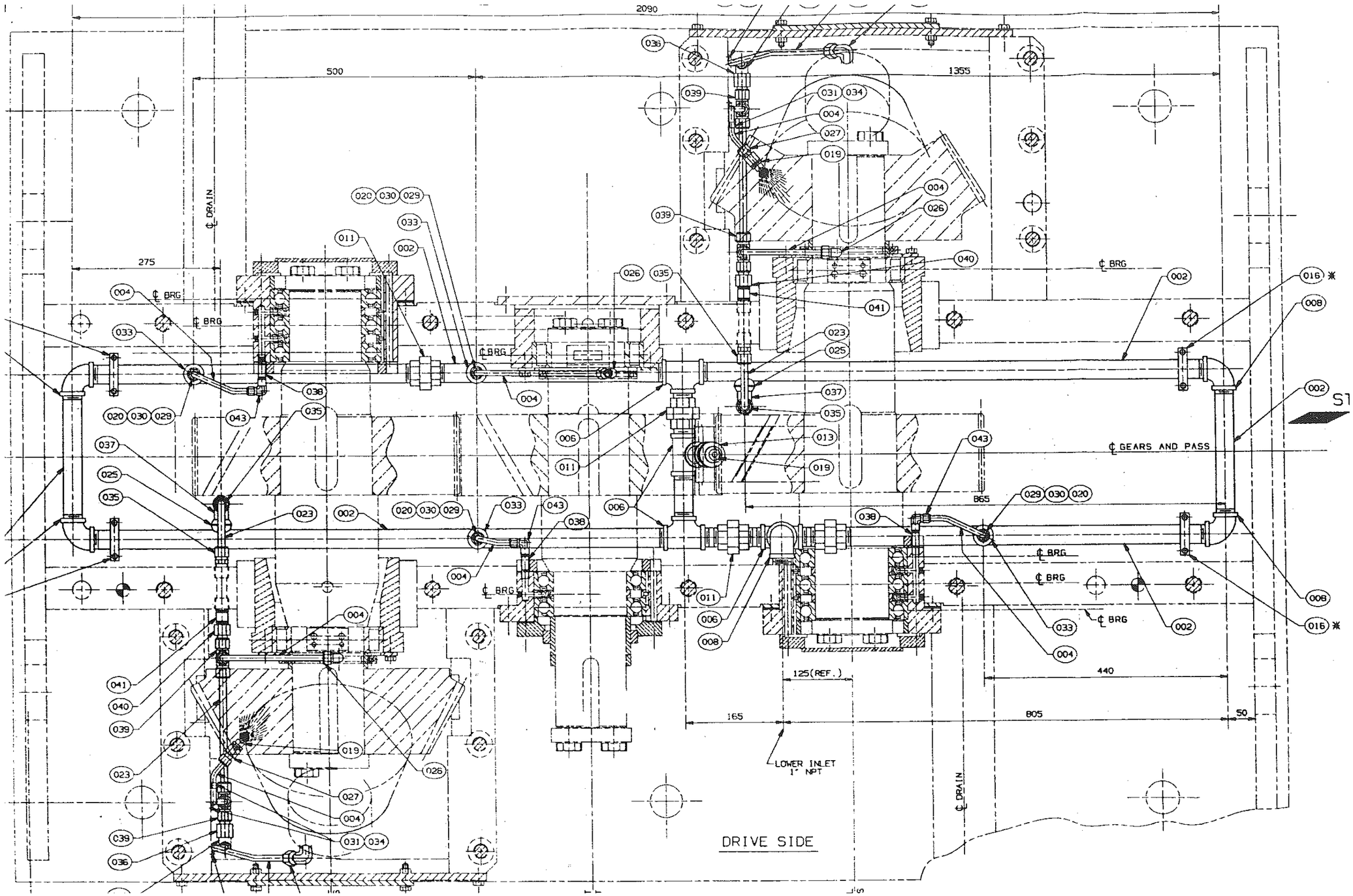

PINCH ROLL MORGAN

MORGAN MACHINERY

Years of manufacturing 1991

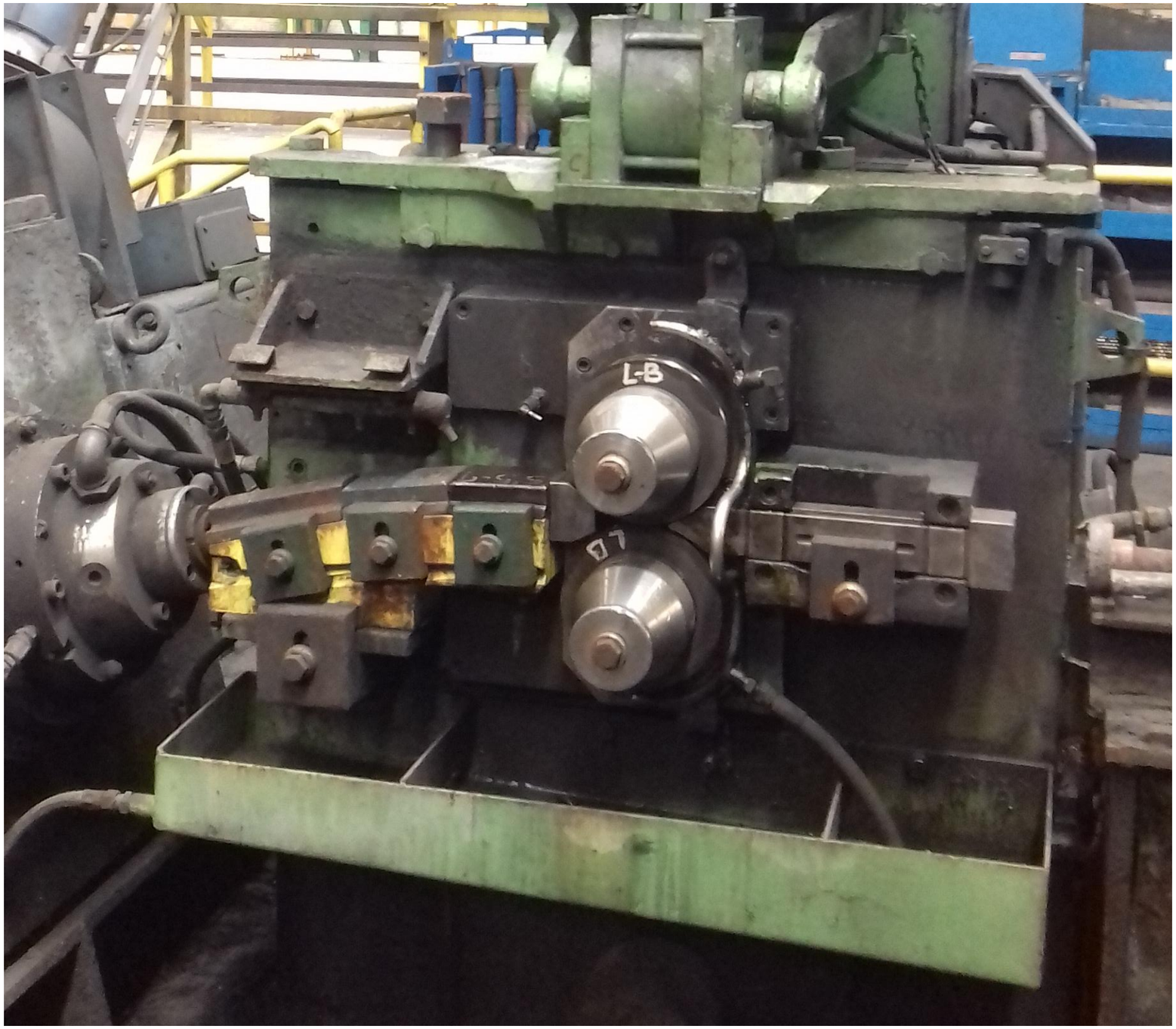

PINCH ROLL MORGAN

MACHINE ASSEMBLY

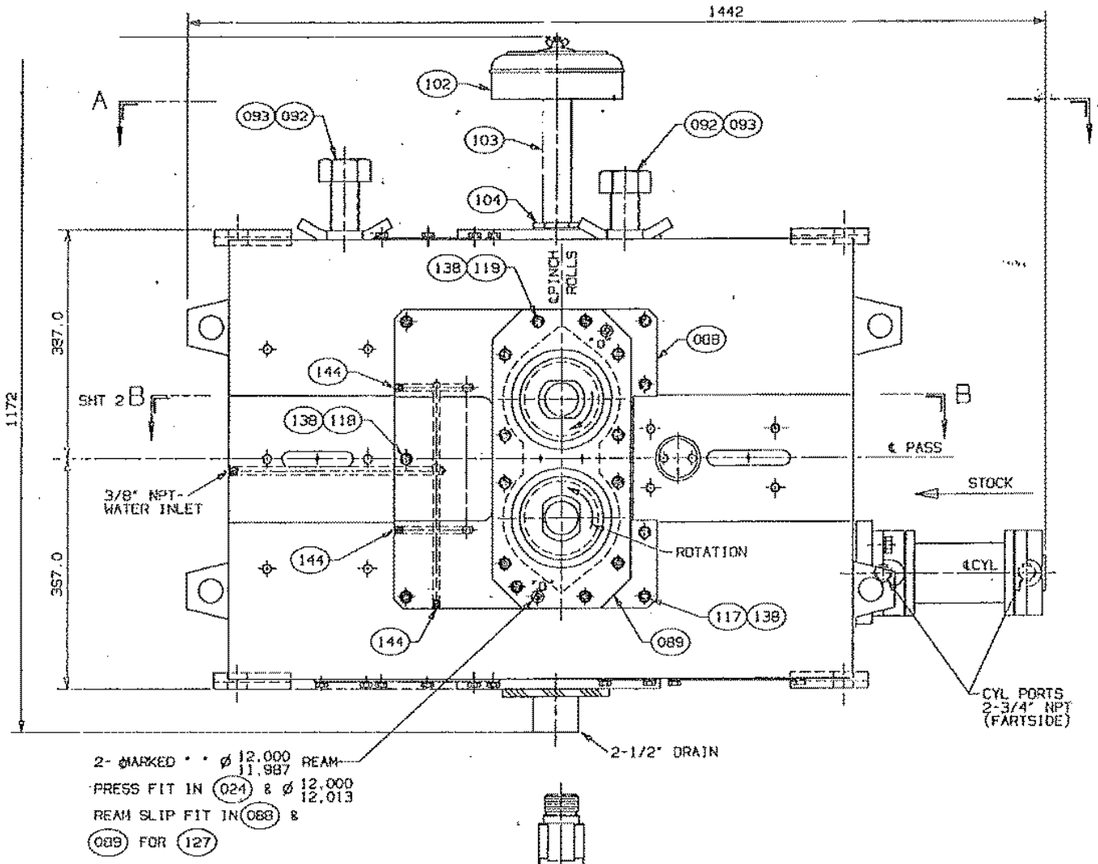

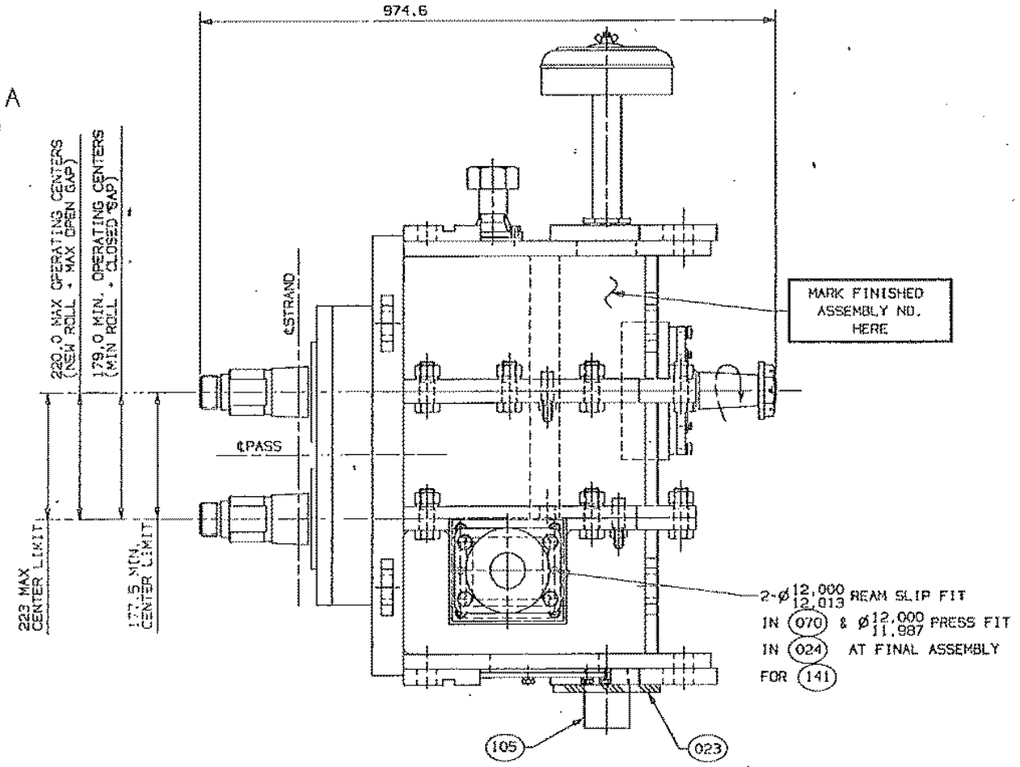

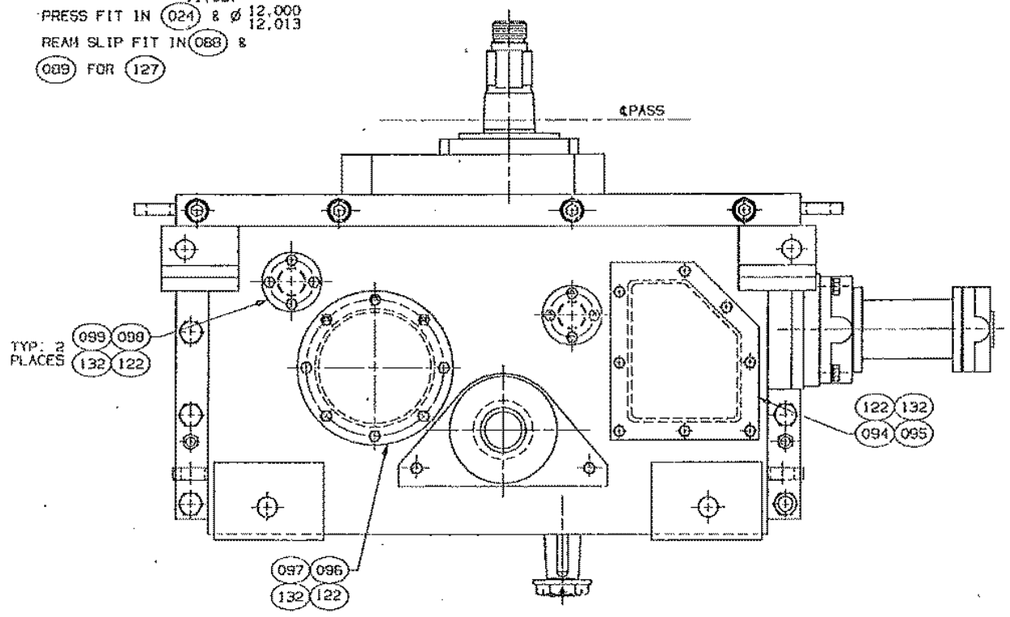

BOTTOM VIEW

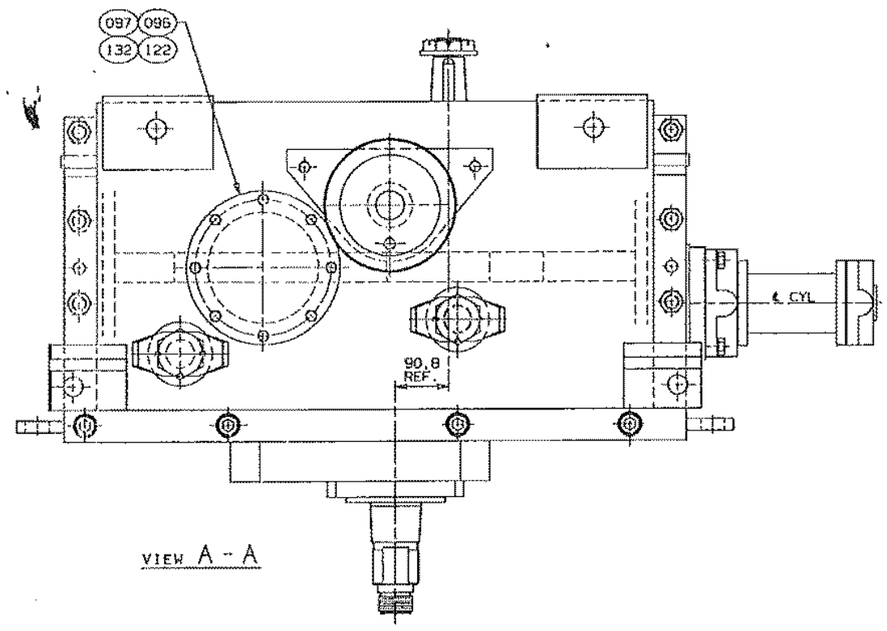

VIEW A - A

PINCH ROLL MORGAN

MACHINE ASSEMBLY

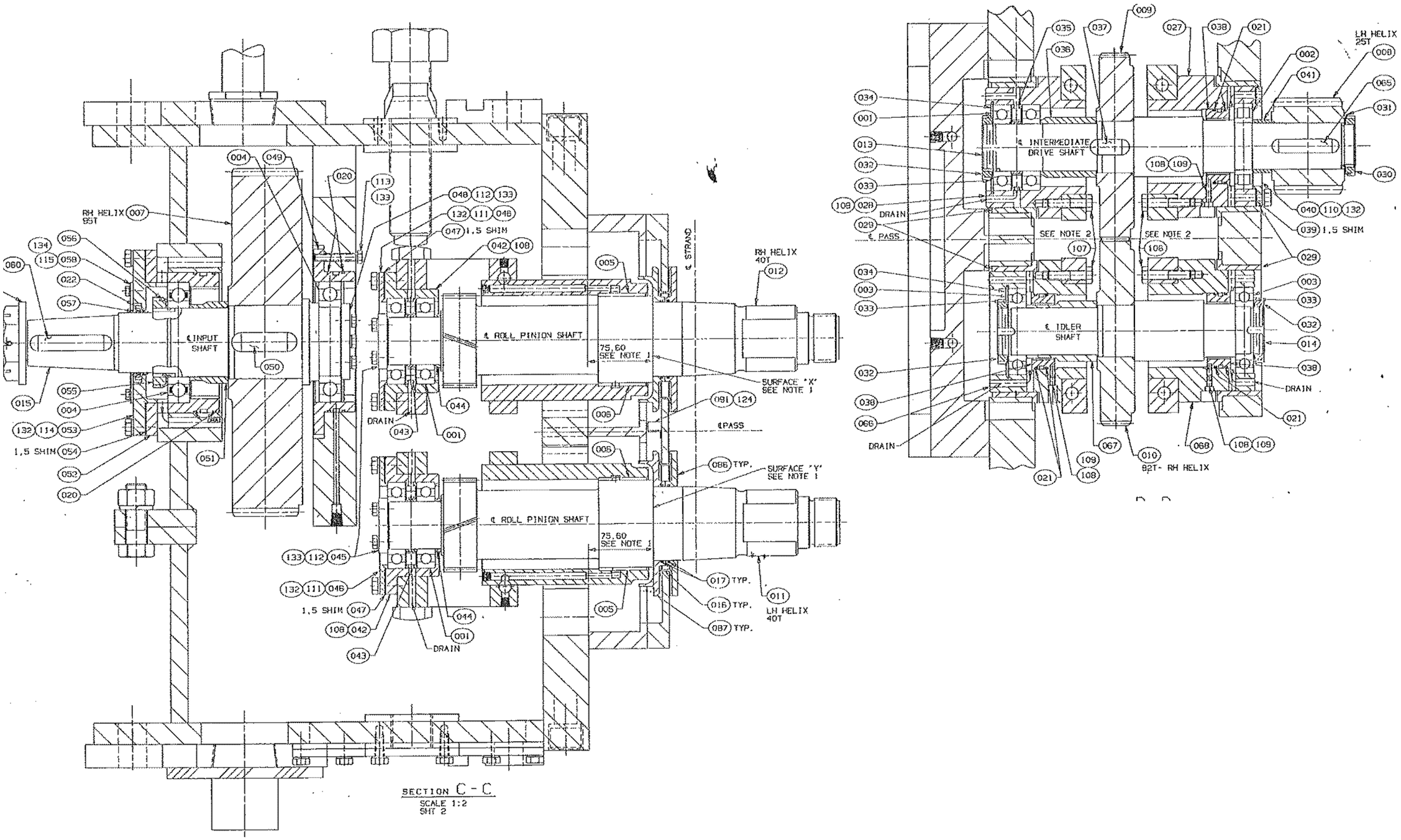

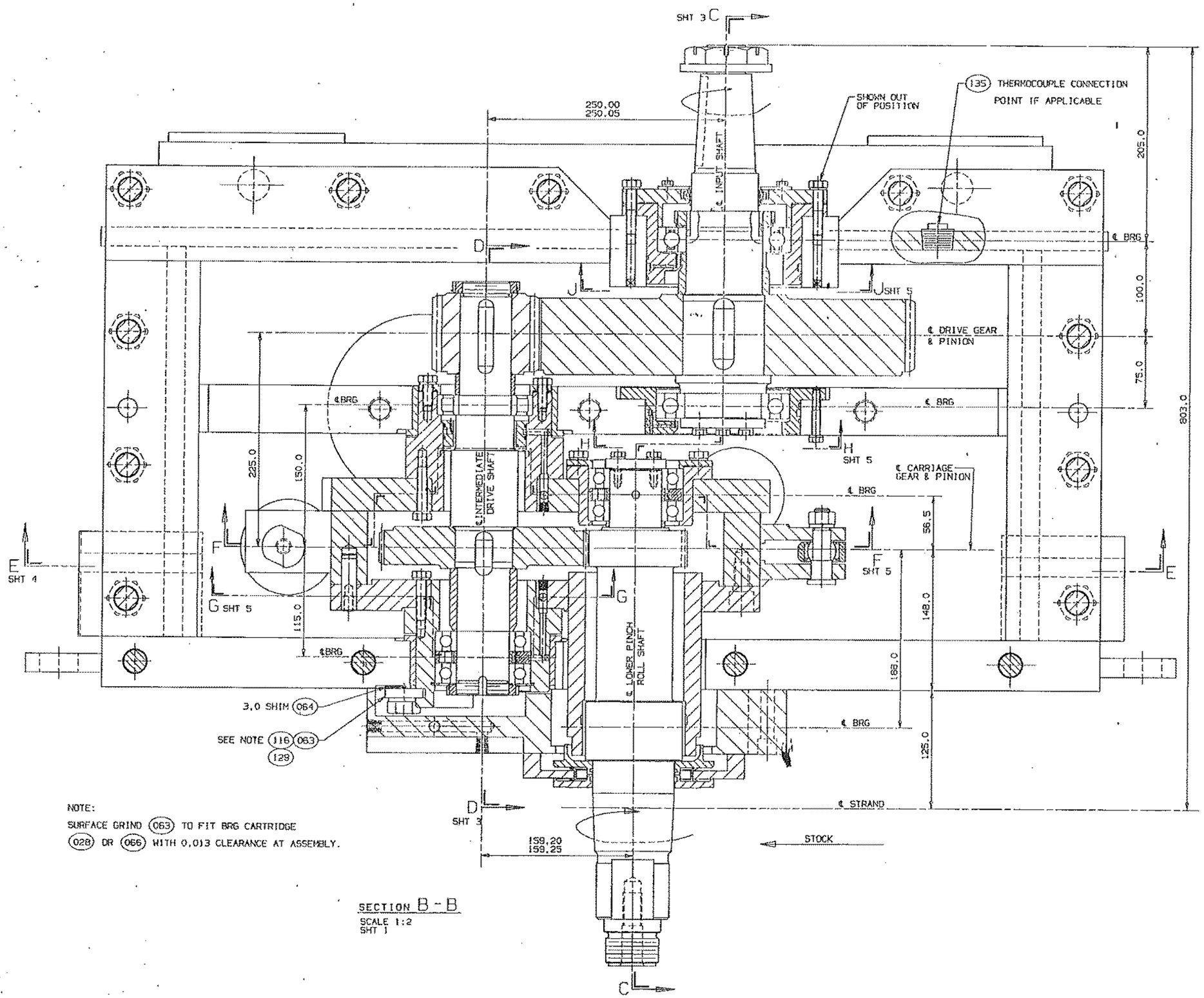

NOTE:
SURFACE GRIND 063 TO FIT BRG CARTRIDGE
028 OR 066 WITH 0.013 CLEARANCE AT ASSEMBLY.

SECTION B - B
SCALE 1:2
SHT 1

PINCH ROLL MORGAN

MACHINE ASSEMBLY

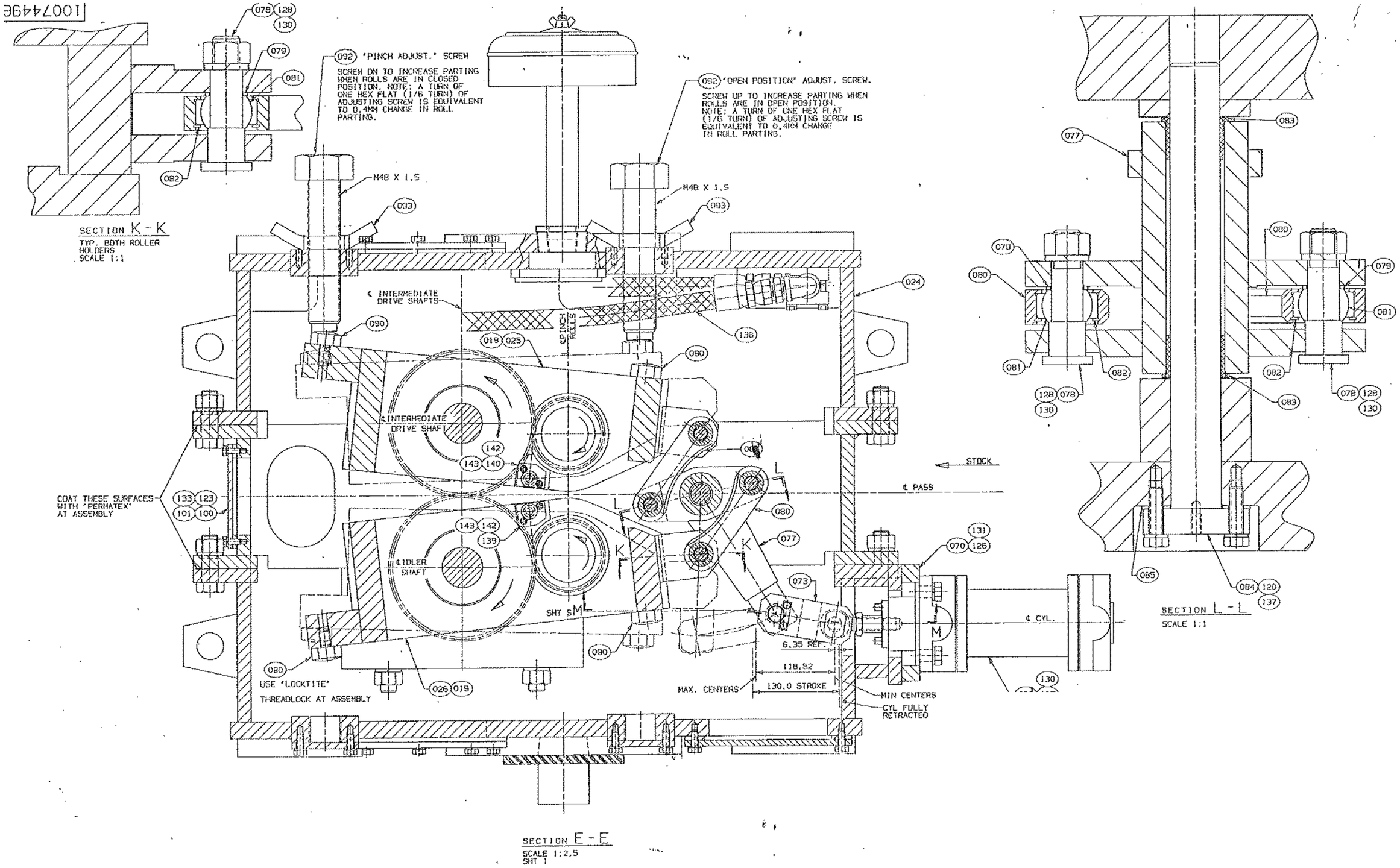

COIL FORMING MORGAN

MORGAN MACHINERY

Years of manufacturing 1991

COIL FORMING MORGAN

MACHINE ASSEMBLY

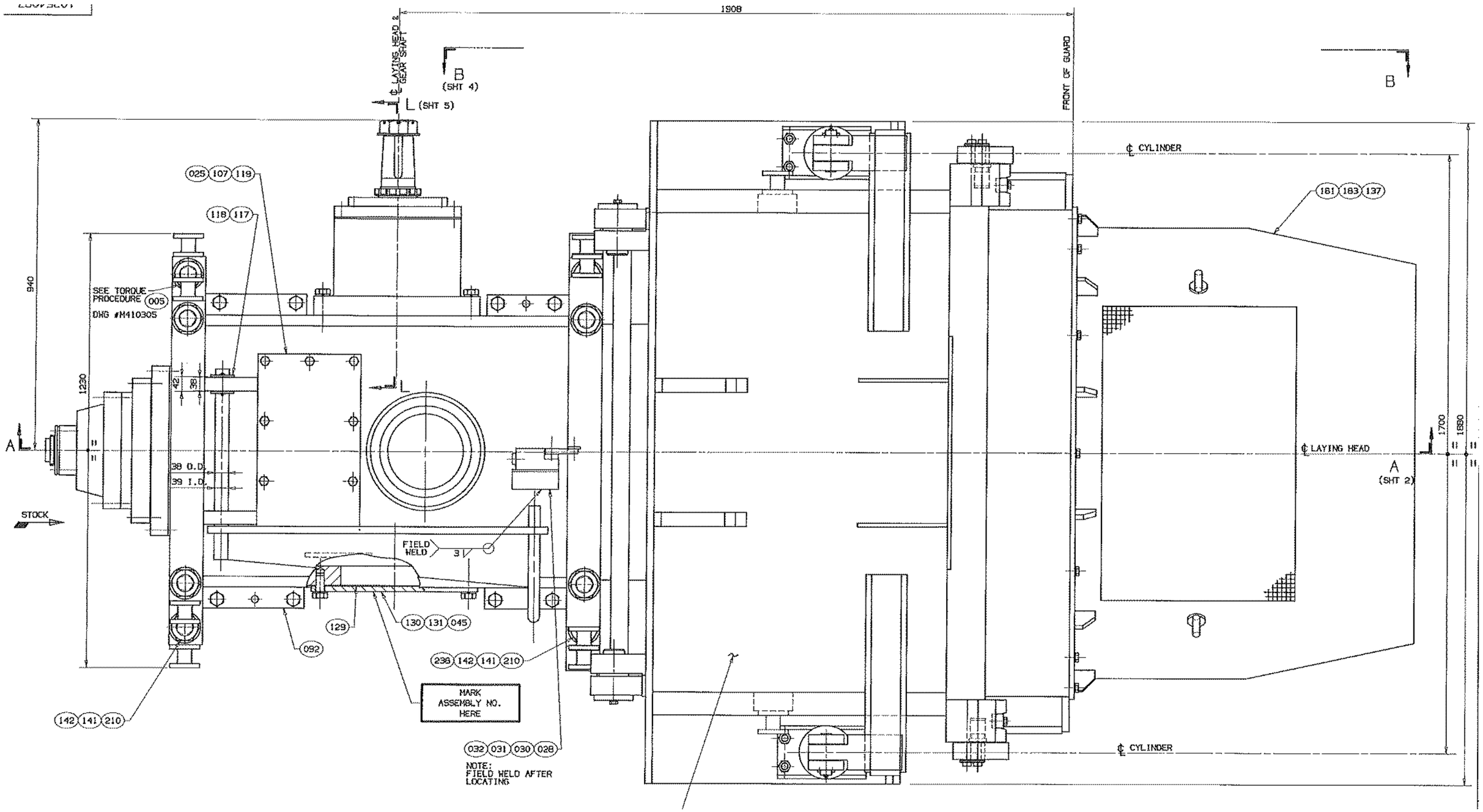

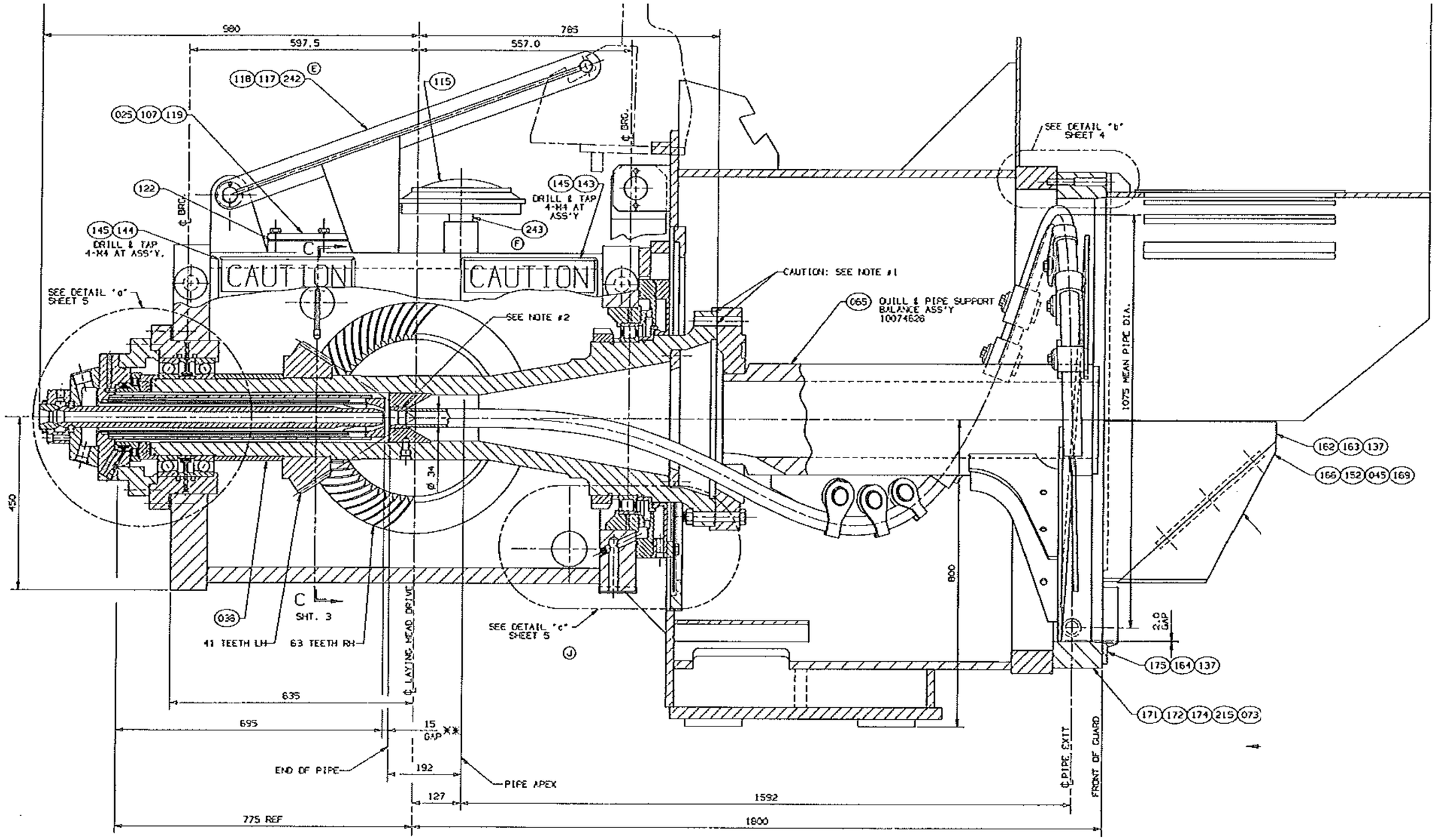
980
597.5
557.0
785
118 117 242 E
115
025 107 119
122
145 144
DRILL & TAP 4-M4 AT ASS'Y.
145 143
DRILL & TAP 4-M4 AT ASS'Y
243 F
℄ BRG.
CAUTION
CAUTION
SEE DETAIL 'a' SHEET 5
SEE NOTE #2
CAUTION: SEE NOTE #1
065 QUILL & PIPE SUPPORT BALANCE ASS'Y 10074628
SEE DETAIL 'b' SHEET 4
1075 MEAN PIPE DIA.
162 163 137
166 152 045 169
450
Ø 34
800
038
41 TEETH LH
63 TEETH RH
SHT. 3
℄ LAYING HEAD DRIVE
SEE DETAIL 'c' SHEET 5
J
2.0 GAP
175 164 137
171 172 174 215 073
635
695
15 GAP **
END OF PIPE
192
PIPE APEX
127
1592
℄ PIPE EXIT
FRONT OF GUARD
775 REF
1800

COIL FORMING MORGAN

MACHINE ASSEMBLY

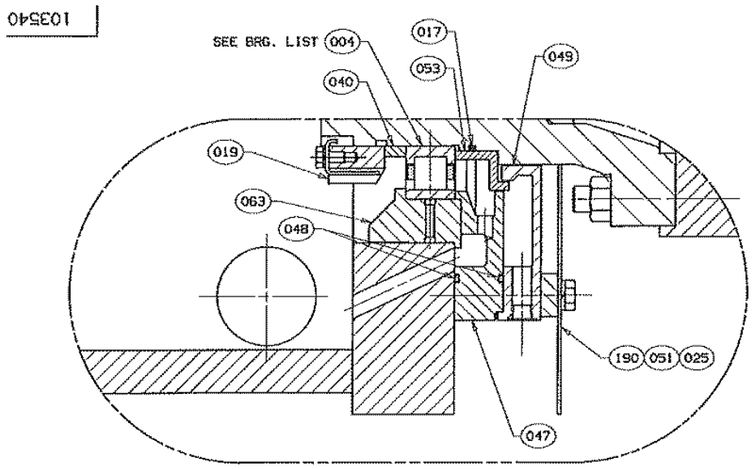

DETAIL 'c'
(SHEET 2)
SCALE 1:2,5

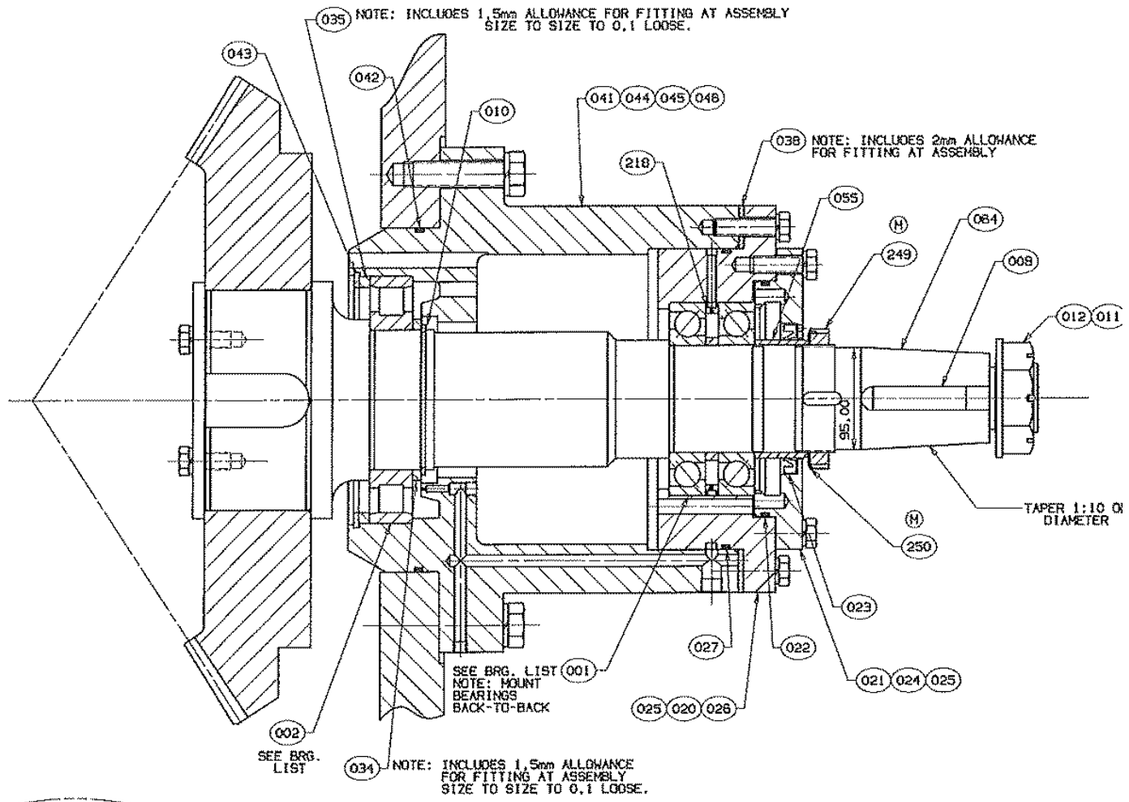

SECTION L - L
(SHEET 1)
SCALE 1:2,5

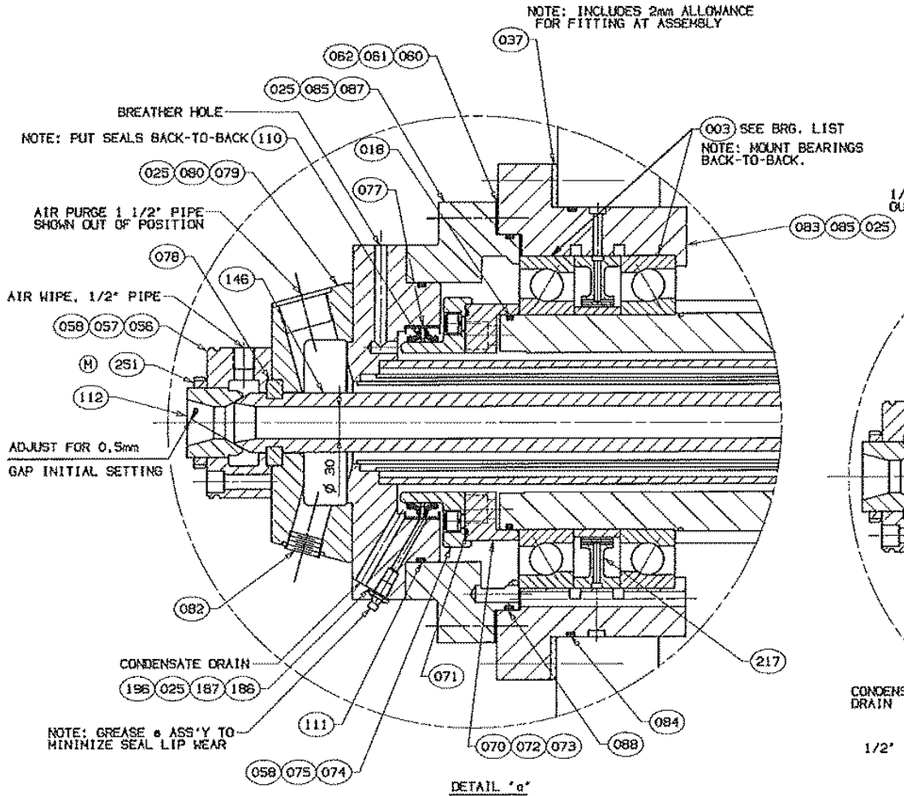

DETAIL 'a'
(SHEET 2)
SCALE 1:2,5

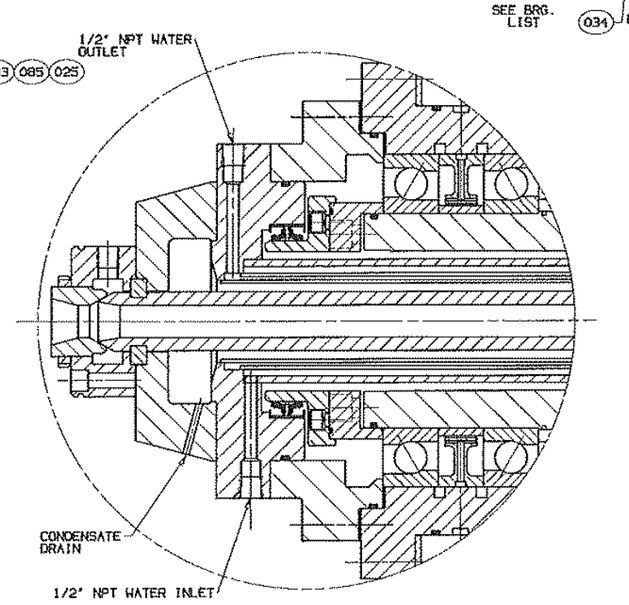

DETAIL 'a' ROTATED TO SHOW WATER CONNECTIONS
(SHEET 2)
SCALE 1:2,5

COIL FORMING MORGAN

MACHINE ASSEMBLY

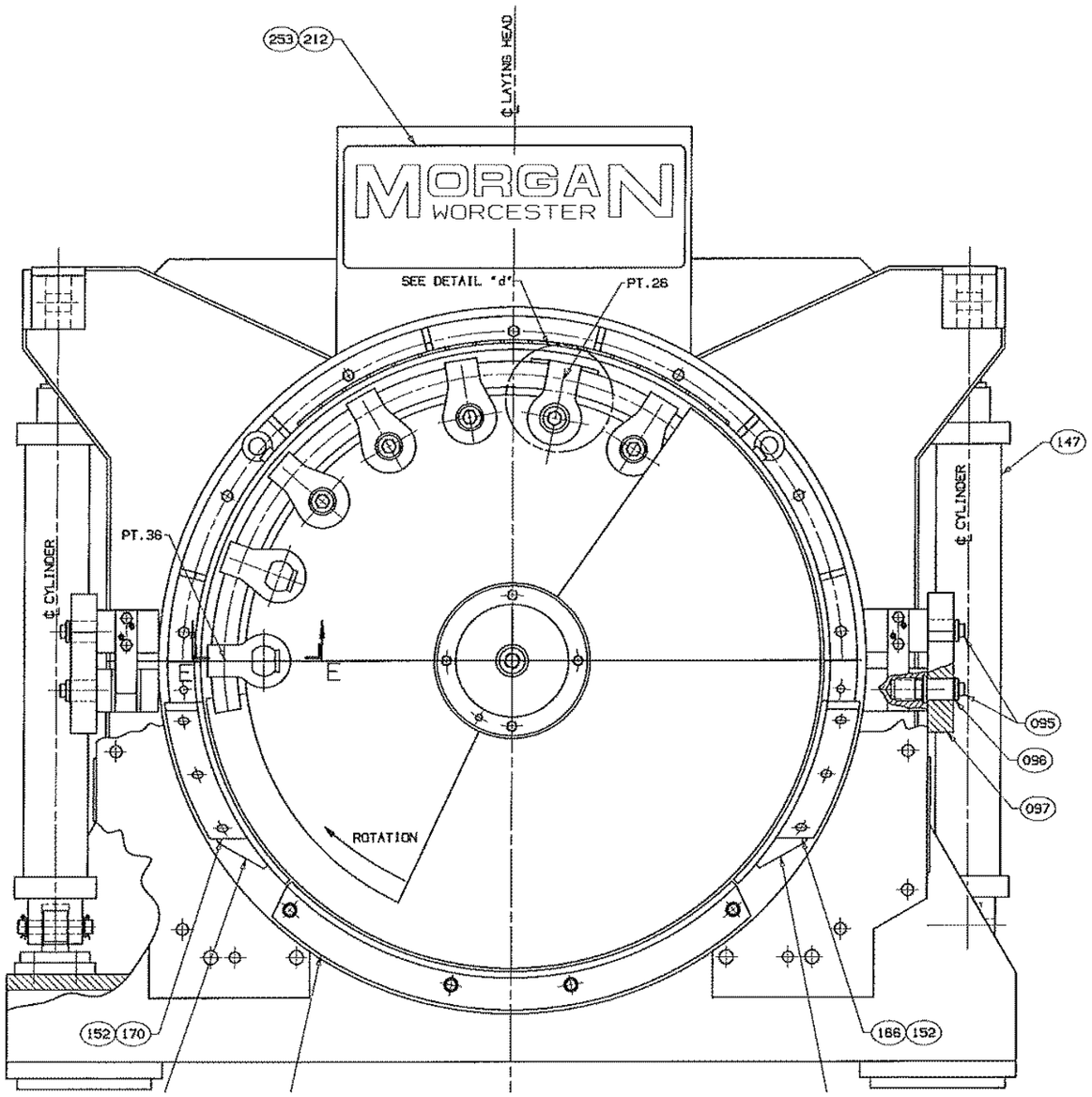

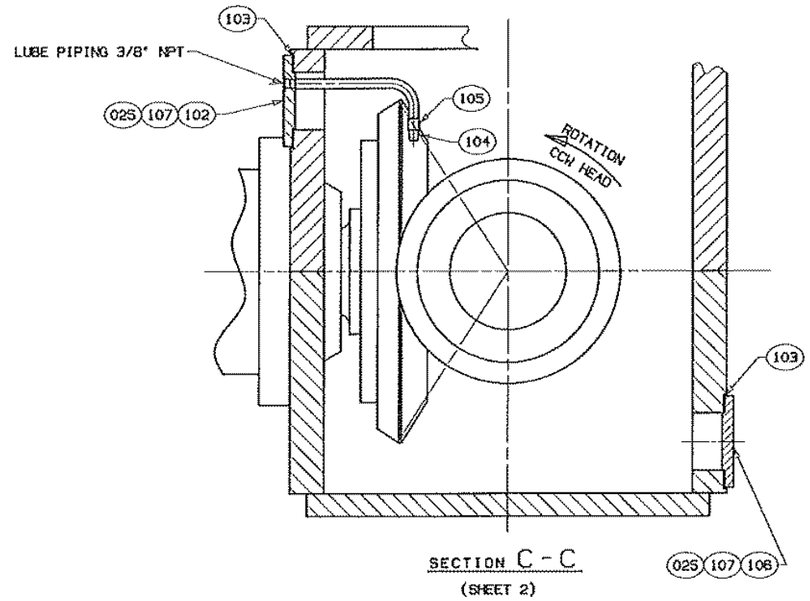

SECTION C - C
(SHEET 2)

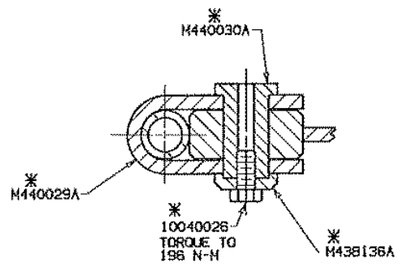

SECTION E - E
SCALE: 1:2.5

NOTE: M440030A, M438136A & 10040026 TO BE ASSEMBLED AS SHOWN AT ALL LOCATIONS.

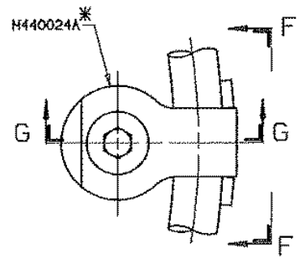

DETAIL "d"
ALL PARTS SAME AS E-E EXCEPT AS NOTED

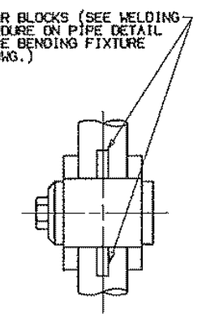

VIEW F - F

NOTE: PIPE KEEPER BARS AT PT. #26 ONLY

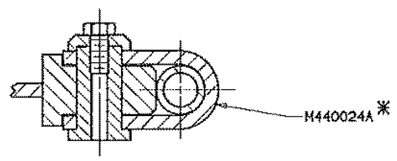

SECTION G - G